LIGHT OIL BURNERS

Ecoflam
www.ecoflam-burners.com

MAIOR P 700.1 PRE
MAIOR P 800.1 PRE
MAIOR P 1000.1 PRE
MAIOR P 1200.1 PRE

EN

Technical data

Operating instructions

Electric diagrams

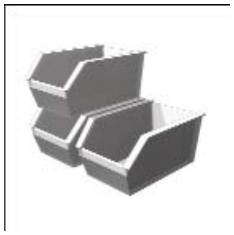

Spare parts list

420010985900

INDEX

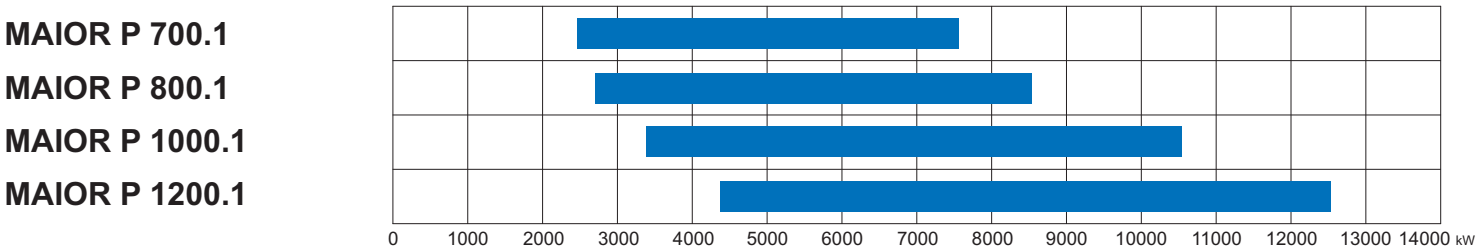

GENERAL WARNINGS - CONFORMITY DECLARATION

Important notes
Ecoflam burners have been designed and built in compliance with all current regulations and directives.

WARNING **All burners comply to the safety and energy saving operation regulations within the standard of their respective performance range.**

DANGER **The burner must not operate outside the working range.**

The quality is guaranteed by a quality and management system certified in accordance with ISO 9001:2008.

MAIOR burners are designed for the low-pollutant combustion of light oil.

WARNING **The burners comply with standard EN267. Assembly and commissioning must be carried out only by authorised specialists and all applicable guidelines and directives must be observed.**

Burner description
MAIOR PRE burners are progressive electronic fully automatic monoblock devices. Burner head is designed to get the lowest emissions in terms of NOx and unburnt particles in order to maximize the heat generator efficiency. Emissions can be different respect to the ones recorded in the lab because they depends a lot on the generator on which the burner is fit.

The installer must comply with compulsory rules. Avoid for instance dangerous atmosphere or not ventilated rooms.

Packaging and handling
Move the burner still in its packaging using a trolley or forklift, taking care not to drop it and elevating it no more than 20cm from ground level. After having removed the packaging, check that the contents are in good condition and correspond with what was ordered. If in doubt, contact the manufacturer.

WARNING **The burner must be installed by a qualified individual.**

If the weight and dimensions do not allow for manual lifting, ask another operator for

help or use a forklift, harness the burner using belts if no eyebolts are available.

WARNING Use the accessories provided (flange, gasket, pins and nuts) to install the burner onto the boiler, taking care not to damage the isolating gasket.

We can accept no warranty liability whatsoever for loss, damage or injury caused by any of the following:
- Inappropriate use.
- Incorrect assembly or repair by the customer or any third party, including the fitting of non-original parts.
- non authorised modifications made on the burner.

Provision of the system and the operating instructions
The firing system manufacturer must supply the operator of the system with operating and maintenance instructions on or before final delivery. These instructions should be displayed in a prominent location at the point of installation of the heat generator, and should include the address and telephone number of the nearest customer service centre.

Notes for the operator
The system should be inspected by a specialist at least once a year. It is advisable to take out a maintenance contract to guarantee regular servicing.

Installation location
The burner must not be operated in rooms containing aggressive vapours (e.g. spray, perchloroethylene, hydrocarbon tetrachloride, solvent, etc.) or tending to heavy dust formation or high air humidity. Adequate ventilation must be provided at the place of installation of the furnace system to ensure a reliable supply with combustion air.

WARNING **BURNER SELECTION:** Type of operation and configuration must be done by professional personnel in order to grant correct working of the burner. Installation, start-up and maintenance must be carried out by authorised specialists and all applicable guidelines and regulations (including local safety regulations and codes of practise) must be observed.

Declaration of conformity for light oil burners

We,

Ecoflam Bruciatori S.p.A.

declare under our sole responsibility that the light oil burners named

MAIOR

conform to the following standards:

EN 267	**EN 50156-1**
EN 55014-1	**EN 55014-2**
EN 60335-1	**EN 60335-2-102**
EN 61000-6-2	**EN 61000-6-3**

These products bear the CE mark in accordance with the stipulations of the following directives:

2014/35/UE Low Voltage Directive
2014/30/UE EMC Directive
2006/42/EC Machine directive
2011/65/EU RoHS2 directive

April, 2018 / Mr. Filippo Maltempi

R&D Director

BURNER DESIGNATION

MAIOR P 700.1 PRE TC

RANGE NAME BY FUEL TYPE

MAIOR	Light oil

MODEL SIZE (Gas: kW; Oil: kg/h)

MAIOR P 700.1	7500 kW

EMISSIONS

-	Standard Class 1 - OIL EN267 (<250 mg/kWh)

OPERATION TYPE

PR	2 stages progressive mechanical gas / oil
MD	2 stages modulating mechanical with PID
PRE	2 stages modulating electronic

HEAD TYPE

TC	Short head
TL	Long head

FUEL

	Light oil
BIODIESEL	Biodiesel
KEROSENE	Kerosene

MODULAR DELIVERY SYSTEM

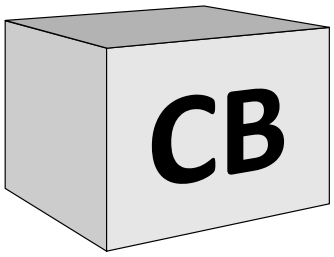

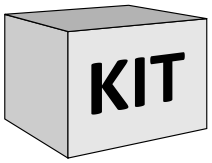

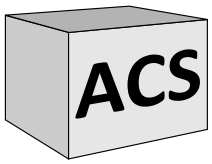

Light oil burners

All light oil burners are delivered complete in one single packaging including filter and flexible hoses up to 6 MW.
Additional accessories and options shall be installed by the installer in accordance to the instruction and local safety regulations and codes of practise.

KITS - Accessories

Kits and accessories are managed and delivered separately.

Component type

CB	Complete burner
KIT	Kits
ACS	Accessories

BURNER DESCRIPTION

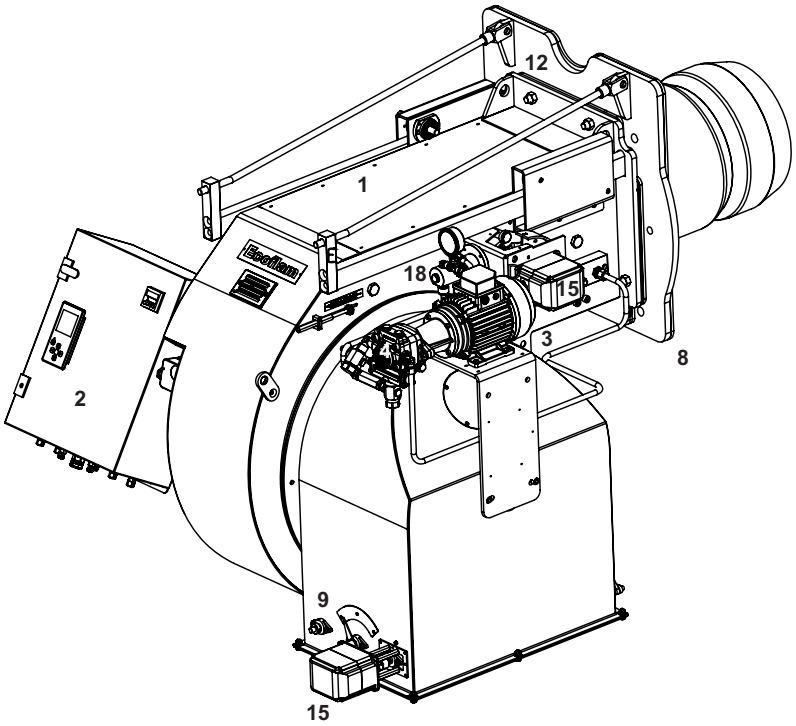

LEGENDA
1. Housing
2. Electrical control panel
3. Pump motor
4. Pump
6. Blast tube
8. Burner fixing flange
9. Air flap regulation
12. Lifting eyebolts
15. Servomotor
18. Oil pressure regulator

Control panel

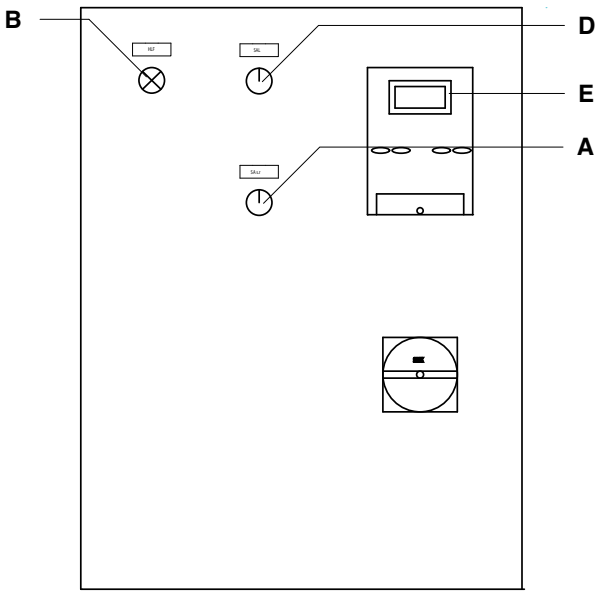

A - reset key
B - operating lamp
D - ON/OFF switch
E - display

Ecoflam

TECHNICAL DATA

MODEL		MAIOR P 700.1	MAIOR P 800.1	MAIOR P 1000.1	MAIOR P 1200.1
Thermal power max.	kW	7.500	8.500	10.500	12.500
	kcal/h	6.465.000	7.328.000	9.052.000	10.776.000
	kg/h	634	718	887	1.053
Thermal power min.	kW	2.417	2.750	3.300	4.367
	kcal/h	2.096.000	2.385.000	2.862.000	3.788.000
	kg/h	205	234	281	371
Operation mode	Type	Progressive electronic oil - Modulating with PID			
Regulation ratio nominal	Type	1÷3 OIL			
Fuel	Type	Light oil (L.C.V. 10.200 kcal/kg max. visc 1,5°E at 20°C) - EL) Hu = 11,86 kWh/kg			
Emission class	std	Standard Class 1 OIL EN267 (<250 mg/kWh)			
Control unit	Type	LAMTEC BT 320			
Air regulation	Type	Air flap	Air flap	Air flap	Air flap
Air flap control with servomotor	Model	LAMTEC			
Air pressure switch	mbar	N/A	2,5…50 mbar		
Flame monitoring	Type	photoresistor			
Ignitier	Model	BRAHMA			
Motor	kW	15	18,5	22	37
Rpm	N°	2.800	2.800	2.800	2.800
Voltage	V/Hz	230/400 V - 50 Hz			
Total power consumption operation	W	16.500	20.000	28.000	41.000
Weight body BBCH	Kg				
Electrical panel protection level	IP	IP40	IP40	IP40	IP40
Sound pressure level without silencer	dB(A) Lab tests	94,1	94,6	95,6	96,3
Sound pressure level with silencer		86,9	87,8	88,1	88,9
Ambient temperature storage	Min/Max	-20°…+70° C			
Ambient temperature use		-10°…+60° C			
Oil pump	Model	TA5	TA5	T5+TV	T5+TV
Oil pump motor	kW	1,5 kW	1,5 kW	5,5 kW	5,5 kW
Nozzles	Type	according to the output requested			

WORKING DIAGRAMS

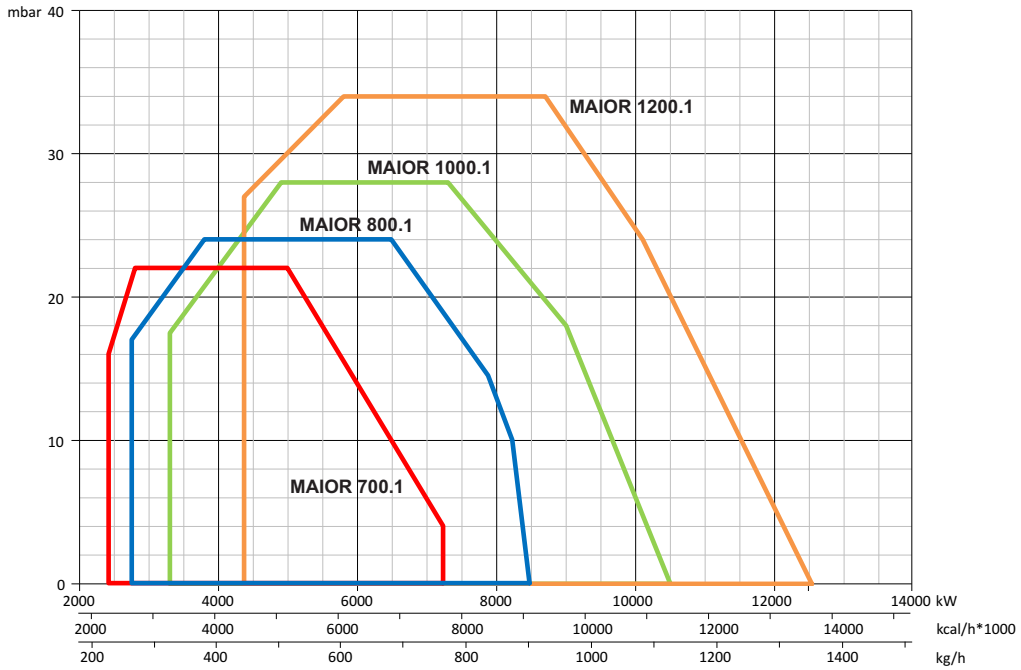

Calculation of burner output
Q_F = Burner output (kW)
Q_N = Rated boiler output(kW)
η = Boiler efficiency (%)

$$Q_F = \frac{Q_N}{\eta} \times 100$$

Working diagrams
The working diagram shows burner output as a function of combustion chamber pressure. It corresponds to the maximum values specified by EN 276 measured at the test fire tube. Boiler efficiency should be taken into consideration when selecting the burner.

TEST BOILER - FLAME DIMENSIONS

FLAME LENGHT LIGHT OIL BURNERS

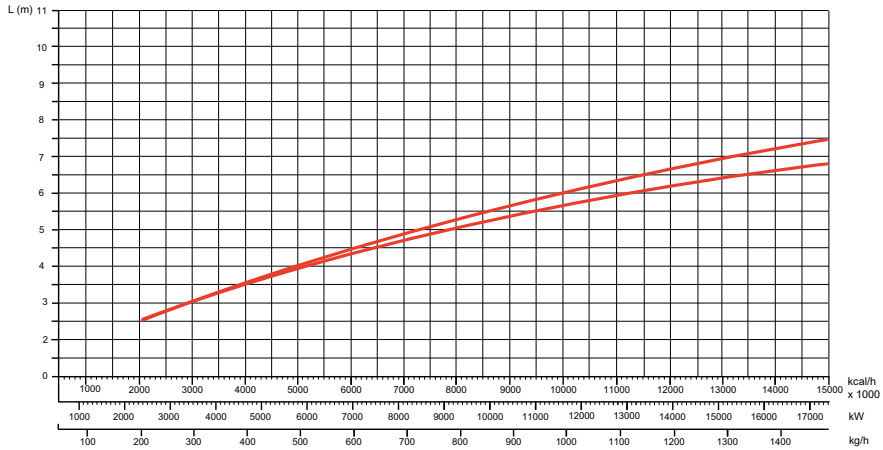

FLAME DIAMETER LIGHT OIL BURNERS

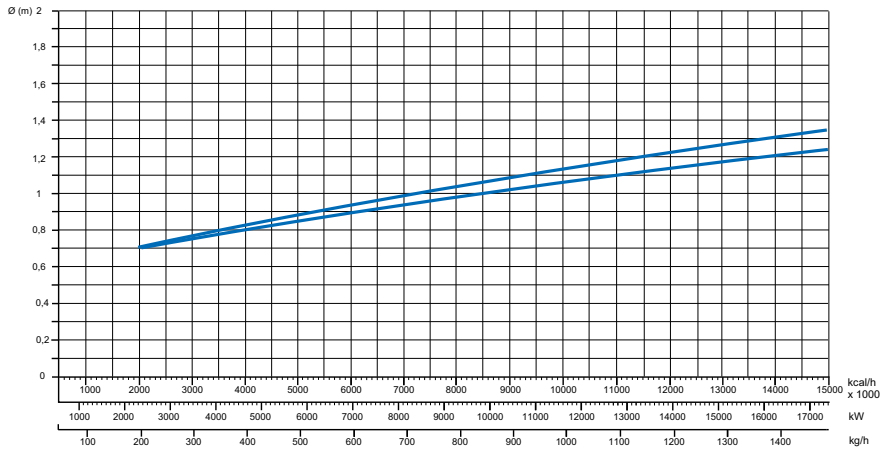

The burner/boiler matching does not pose any problem if the boiler is CE type-approved.
If the burner must be combined with a boiler that has not been CE type-approved and/or its combustion chamber dimensions are clearly smaller than those indicated in diagram, consult the manufacturer.
The firing rates were set in relation to special test boilers, according to EN 267 regulations.

The sizes are indicative and dipend on the configuration, to the combustion chamber pressure and to the draught. The values have been taken out from tests executed with flame tubes.

The dimensions of the flame are made in test boiler in laboratory without resistence therefore exists max and min lenght that take into account the difference in lenght that comes from the boiler backpressure.

Example:
Burner thermal output = 8000 kW;
L flame (m) = 5 m (medium value)
D flame (m) = 1 m (medium value)

WARNING: Some flame modifications can be done in our FLEXSHOP in the factory in order to shape the flame and adapt it to some special boiler or application.

OVERALL DIMENSIONS

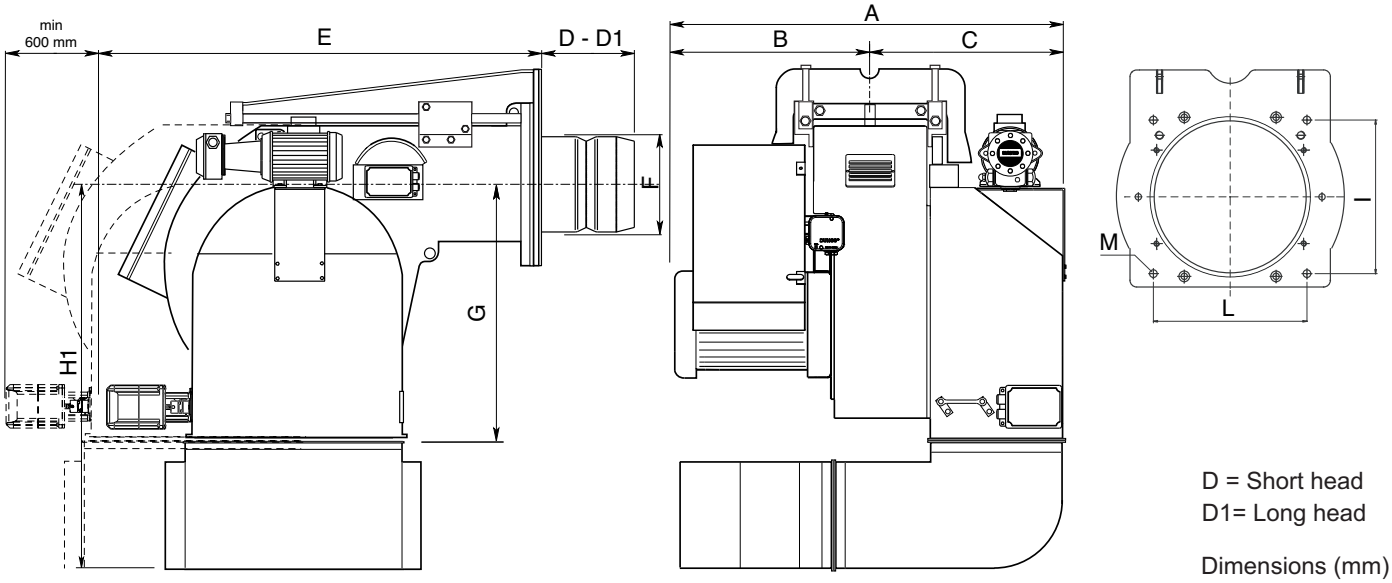

D = Short head
D1= Long head

Dimensions (mm)

Models	R	R1	S	S1
MAIOR P 7-1200.1	360	360	290	400

Models	A	B	C	D	D1	E	F	G	H1	I	L	M
MAIOR P 700.1 PRE	1255	631	624	525	-	1327	380	775	1270	460	460	M20
MAIOR P 800.1 PRE												
MAIOR P 1000.1 PRE												
MAIOR P 1200.1 PRE												

Burner-boiler mounting flange

Fixing hole dimensions are “I” and “L” as per dimension table.
Boiler hole shall be done according to the blast tube dimension “F” plus 15-25 mm in order to be able to extract it during maintenance.

WARNING: Please follow the suggested dimension for the hole on the boiler flange in order to fit the burner. Make sure that between the boiler and the blast tube proper insulation is fitted.

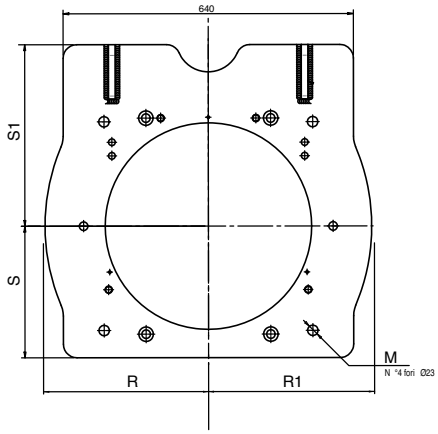

Packaging (only burner)

Models	X	Y	Z	kg
MAIOR P 700.1	1742	2372	1447	
MAIOR P 800.1	1742	2372	1447	
MAIOR P 1000.1	1742	2372	1447	
MAIOR P 1200.1	1742	2372	1447	

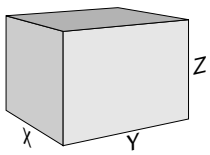

OIL OPERATING MODE - GENERAL SAFETY FUNCTIONS

START-UP MODE

As soon as the furnace system is required to supply heat the burner control circuit will close and the program be started. After the program has run down the burner will start. The air damper is closed when the burner iis out of operation.
The automatic furnace controller controls and monitors the starting function.
The electric actuator opens the closed air damper to its full-load position so that the burner will sweep the furnace compartment and exhaust ports at the required air flow rates. Shortly after the pre-ventilation process has been started the lack-of-air cut-out must change over to operating position within a certain time, i.e. the minimum air pressure setting must be reached and maintained until the burner is turned off. At the end of the specified pre-ventilation time the air damper will be moved into its partial load position. This operation will be followed by the pre-ignition procedure and the oil feed start. The solenoid valves will open and thus allow the pressurized oil to flow to the nozzle and to the return line.
The oil will be atomized, mixed with the combustion air and ignited.
A safety period is provided to allow the flame to develop a proper and steady pattern.
On the termination of the safety period, a flame signal must have been received by the automatic furnace controller via the flame monitor and remain on until the regular shut-off.
The startup program of the burner has now been completed.

OIL OPERATING MODE

After the flame has developed the load regulator will be enabled which brings the burner into its operating position.
The load regulator will now control the burner automatically between its partial-load and full-load stages.

Depending on the heat demand, the electric actuator of the mechanical compound control system will be fed with the OPEN or CLOSE signal via the regulator and thus increase or decrease the oil and air flow rates.
This compound control system will vary the positions of the oil control valve and air damper and thus regulate the oil flow rate in conjunction with the air flow rate. The burner can either be controlled in two-stage sliding mode or, if a respective controller is provided, in stepless control mode.
The stepless control will allow the burner to be operated at any desired stage between its partial-load and full-load positions. The burner will be turned off from its partial-load position. The air damper will be closed when the burner is out of operation and will thus prevent cold air flowing through the burner chamber, heat exchanger and chimney.
The interior cooling losses will be greatly minimized.

GENERAL SAFETY FUNCTIONS

In case a flame does not develop when starting the burner (fuel release) the burner will shut off at the end of the safety period (safety lock-out).
A safety lock-out will also occur in the case of flame failure during operation, air flow failure during the pre-ventilation phase and pressure failure during the whole period of burner operation.
Any failure of the flame signal at the end of the safety period and a flame signal during the pre-ventilation phase (external light control) will result in a safety lock-out with the control box being locked.

The trouble is indicated by the trouble signal lamp lighting up.
The control box can be unlocked immediately after a safety lock-out by pressing the unlocking key. The program unit will return to its starting position and proceed with the restart of the burner.
A voltage failure will result in a regular shut-off of the burner. Upon voltage recovery there may be an automatic restart unless another interlock is provided, e.g. by the safety system. In any case of trouble the fuel oil supply will be shut off right away. The program unit will stop at the same time causing also the trouble location indicator to stop.
The symbols will indicate the kind of trouble.

INSTALLATION

Fitting the burner to the boiler

! **WARNING:** handling and moving operations must be carried out by specialised personnel.
Use the eyebolts to lift the burner in order that it will not overturn and fall down.

To perform the installation of the burner into the boiler drill the boiler plate according to the dimension given on this manual and place the burner towards it by lifting and moving the burner by means of eyebolts.

Place the gasket on the burner flange and install the burner into the boiler by fixing nuts into the bolts.
The space between the blast tube and the boiler lining must be sealed with appropriate insulating material.

Burner blast tube insertion depth and brickwork
Unless otherwise specified by the boiler manufacturer, heat generators without a cooled front wall require brickwork or insulation 5 as shown in the illustration. The brickwork must not protrude beyond the leading edge of the blast tube, and should have a minimum conical angle of 60°. Gap 6 must be filled with an elastic, non-combustible insulation material. For boilers with reverse firing, the minimum burner tube insertion depth A as specified in the boiler manufacturer's instructions must be observed.

On boilers the blast tube insertion depth should be observed as per the boiler manufacturer's instructions.
Reverse flame boiler :
A = 50-100 mm.
Three pass boilers :
A1 = 50-100 mm.

Exhaust system
To avoid unfavourable noise emissions, right-angled connectors should not be used on the flue gas side of the boiler.

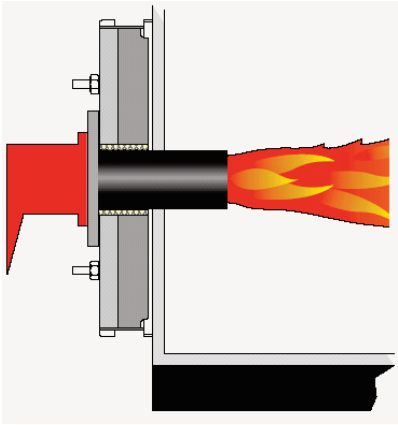

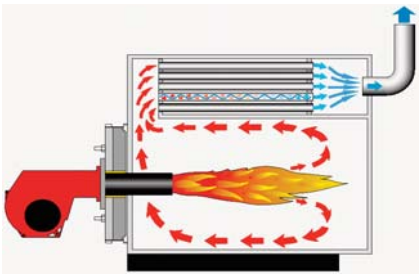

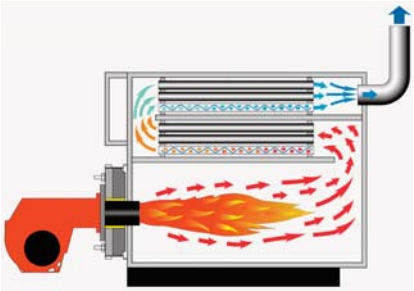

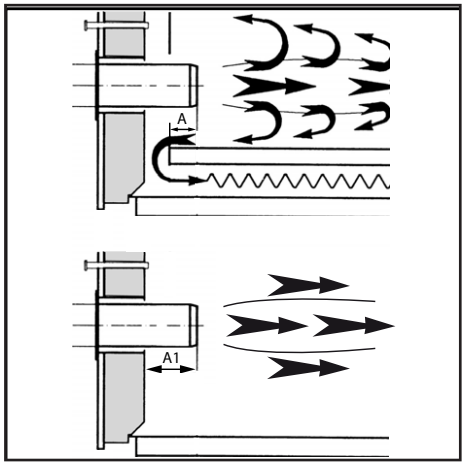

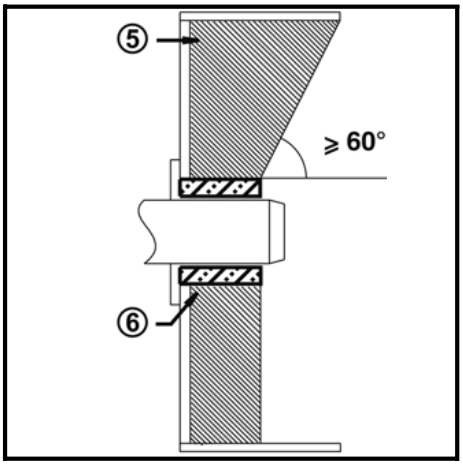

BURNER LINING
Check before burner installation:

1. Depending on the type of boiler (reverse flame or three pass) check the burner blast tube installation depth according to the data specified by the boiler manufacturer or consult the burner producer.

2. From the factory the nozzle for progressive version must be specified from the customer according to boiler output and combustion chamber geometry, otherwise we will select the nozzle for the 80% capacity of the burner.

3. Check the ignition electrodes and the nozzle on the burner head as per factory setting (see figures).
The setting of the mixing and ignition unit according to the boiler output will be performed during commissioning procedure.

4. Check that the head is preset at 50%.

Position of the electrodes - nozzle installation

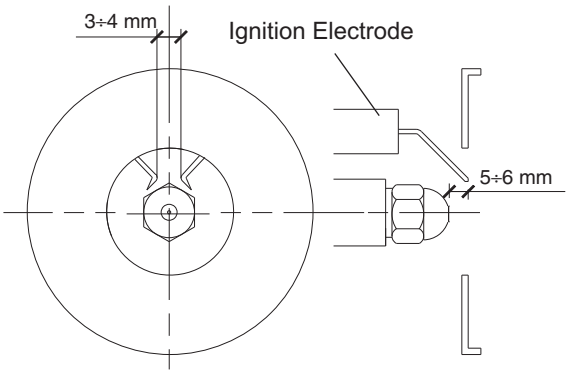

INSTALLATION

Oil connection

WARNING: make sure that the feeding line is properly dimensioned and is in compliance with the local safety rules and code of practise in the country of installation

HYDRAULIC CIRCUIT LIGHT OIL FEEDING

176: oil pump
178: solenoid valve
180: nozzle rod
184: output control valve
311: return oil pressure switch
CV: check valve
RL: return line
VL: suction line
VLO: working oil valve

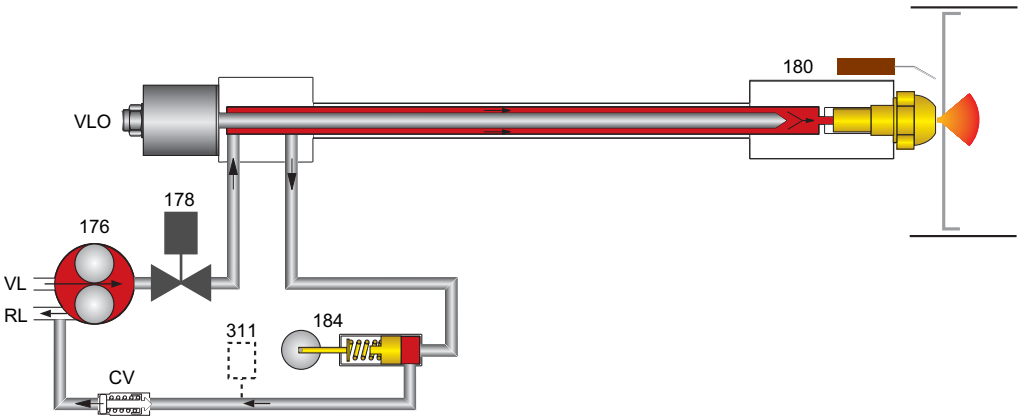

OIL PRESSURE CONTROL (FEED)

The feed pressure is controlled by means of the pressure regulator installed in the pump and should be set at 25 bar. The pressure regulator is operated by turning its screw. Make sure to fill the pump with oil prior to taking into operation.

PUMP BLEEDING

Open the feed and return stop valves and ensure the ring line (if any) is in operation. Reduce the oil pressure at the pressure regulating valve. Turn on the pump by pressing the contactor.
Check the pump for proper direction of rotation. Check for proper oil delivery and absence of leaks in the hydraulic oil system. For bleeding the pump open the pressure gauge connection, for example. When taking the burner into operation pro ceed by gradually increasing the pressure to operating level (25 bar).

CHECKING THE PRESSURE (OIL SUCTION PRESSURE)

The maximum permissible vacuum is 0,4 bar. At higher vacuum levels the fuel oil will tend to separate air from oil which may lead to operating trouble. In the ring line mode of operation the recommended oil pressure is 2 bar.

OIL CONNECTION

Hoses are used for connection to the oil lines and stop valves. The hoses must be installed according to the applicable standards (relieved of tensile load, free of distortion) to avoid kinking and exclude the danger of breakage. Take care when mounting the oil lines to bring their ends as close to the burners as possible and to arrange them in a way that the boiler door and the burner can be swing out without any obstruction.
Refer to the technical documentation for the line dimensions for the feed and return lines from the stop valves to the tank.

OIL FILTER

A filter must be installed upstream of the pump to protect the oil pressure pump and the hydraulic system.

INSTALLATION OPTIONS

• Two-line installation (separate feed and return lines without delivery pump).
• Ring line system (with delivery pump and gas-air separator).

LEGENDA

1. Inlet
2. Return
3. Bleed and pressure gauge port
4. Vacuum gauge port
5. Pressure adjustment
6. Nozzle outlet
7. Heater
8. Hose
9. Oil filter
10. Oil ball valve

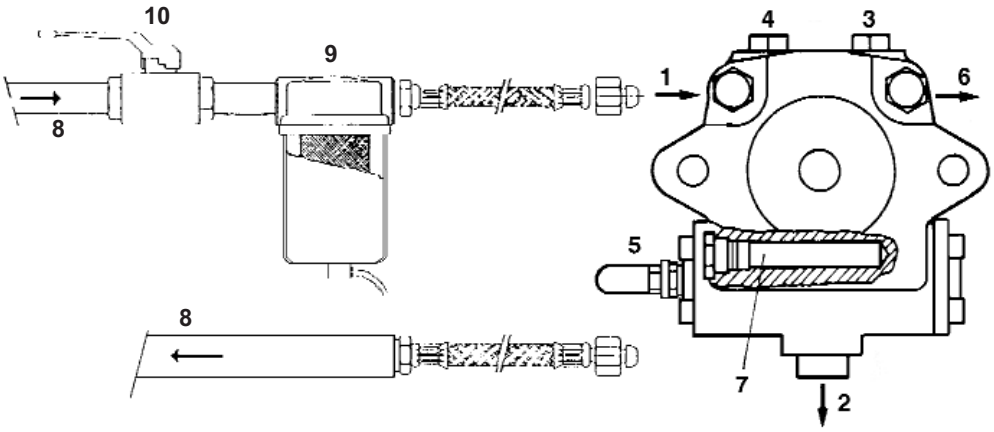

WARNING: Check that the pump rotation is correct and before start up it has been pre-filled

INSTALLATION

Feeding and suction line for light oil

SUCTION LINE LENGTHS FOR PIPE SYSTEMS

• Two-pipe siphon feed system

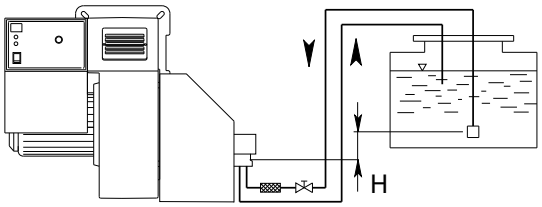

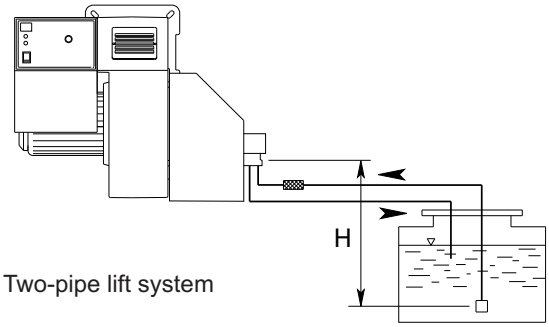

• Two-pipe lift system

The burner is equipped with a self-priming pump which is capable of feeding itself within the limits listed in the table at the side.

H (m)	PIPE LENGTH (m)			
	TA5		T5	
	ø 20 mm	ø 30 mm	ø 20 mm	ø 30 mm
3	35	150	--	35
2,5	30	150	--	32
2	25	150	--	28
1,5	22	150	--	23
1	20	150	--	18
0,5	17	150	--	14
0	15	150	--	10
-0,5	10	150	--	5
-1	4	150	--	--
-1,5	--	140	--	--
-2	--	120	--	--
-2,5	--	80	--	--
-3	--	60	--	--
-3,5	--	33	--	--
-4	--	8	--	--

WARNING: To calculate the length of the pipework all the straight parts, curves, up and down pipes must be taken into consideration.
The static suction height is the distance between the standing valve and the axis of the burner pump.
Negative pressure must not exceed 0,45 bar; if negative pressure is greater pump operation may become faulty, leading to an increase in mechanical noise and perhaps even breakage.
All oil ring installations must comply with the local safety rules existing in the country of installation

The pumps that are used can be installed both into single-pipe and double-pipe systems:
Single-pipe system: a single pipe drives the oil from the tank to the pump's inlet that deliver the pressurized oil to the nozzle and part of the oil not used goes back to the pump. With this single pipe the by-pass plug must be removed and the return port must be sealed with steel plug and washer.
Double-pipe system: this is the default solution from the factory.
The return pipe send the excess oil from the pump to the tank. Depending on the type of pump used to change from a 1-pipe system to a 2-pipe-system, insert the by-pass plug (as for ccw-rotation referring to the pump shaft).

Note for commissioning: during commissioning, the filter, pipelines and pumps must be pre-filled with fuel oil and vented.
The direction of rotation of the motor should be checked. When commissioning it must be ensured that pump never run dry.

NOZZLE SELECTION

Please refer to diagram to select Ecoflam recommended nozzle for the output that is required given the output necessary in the installation.
Regular maintenance is highly recommended.
Nozzle has to be cleaned in petrol or paraffin and if filter or other parts are defective or
damaged the nozzle must be replaced.

NOZZLE CHART IS AVAILABLE ON APPENDIX PAGE

SUNTEC TA

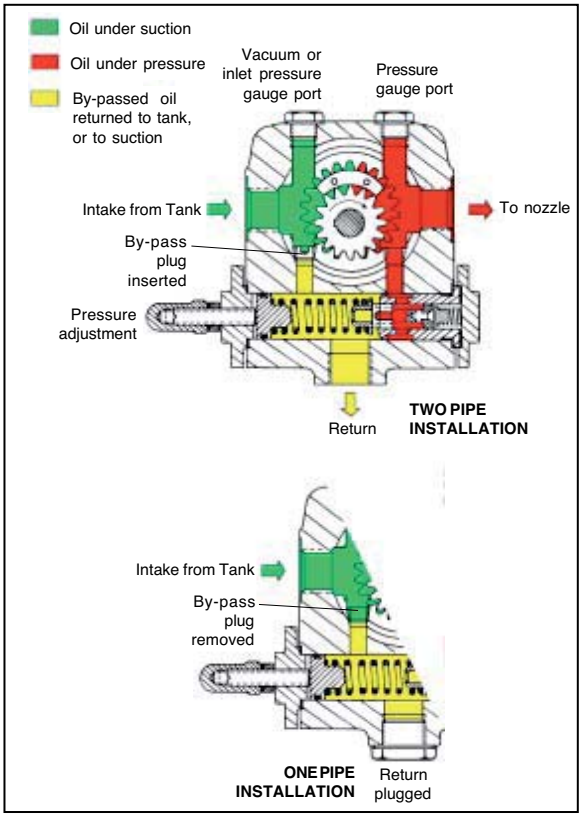

INSTALLATION

Electrical connections

WARNING: Electrical wiring must be carried out with electrical supply disconnected and with burner switch in position OFF.
Electrical supply must correspond to the one shown on the burner label.

APPLICABLE STANDARD

The electrical connection work comprising all the installation materials, terminals and earth connections must be carried out in accordance with the applicable regulations. For the electrical installation of the burner care must be taken to observe the circuit diagram made out for the furnace system.
The electrical connection of the burner and instruments shall be entrusted to authorized specialists only.

NOTE: For the installation of the connection cables care must be taken to provide cable loops of sufficient length to allow for the swing-out of the boiler door and burner.
Make sure after the completion of the electrical connection work to check the wiring of the electrical system of the burner. This should include a check of the direction of rotation of the burner motor (fan).

GENERAL WARNINGS:

All applicable electrical safety regulations must be followed. Failure to correctly dimension the suitable input power and earth the equipment may cause damages to person and compromise the correct function of the burner therefore the electrical system shall be checked by qualifed personnel.
The manufacturer declines all responsibility for modifcations or connections different from those shown in the electrical scheme.
Adapters, multiple plugs and extension cables may not be used for the equipment's power supply.
An omnipolar switch in accordance with current safety regulations is required for the mains supply connection.

ELECTRICAL CONNECTION

1) of the burner
- Built-in electrical cabinet
Use cable gland in order to secure the required level of protection. All the links, power and control, are connected to the terminal block of the cabinet.

Provide cables in sufficient length to secure the rotation of the burner body according to the assembly.
Check and adjust the size of the contactors and thermal relays and the wires section according to the motor and supply voltage specs.

ATTENTION: Wiring is not supplied.

The burners are produced with connections suitable for power supply 380-400 V three-phase.
The burners with electric motors of an output lower or equal to 3 kW can be adapted to 220-230 V (please follow the instructions on the backside); motors with higher output can only work 380-400 V three-phase.
In case of request of burners different from the above mentioned standard, it is recommended to make specific mention in the order.

Instructions: how to adapt electric motors of an output lower or equal to 3 kW to 220-230 V power supply
It is possible to change the voltage of the burner by operating as follows:
1. change the connection inside the electric box of the motor, from star to delta (see picture 1);
2. change the setting of the thermal relay, referring to the absorption values indicated in the motor nameplate. If necessary, replace the thermal relay with another one of suitable scale.
This operation is not possible on motors above 3 kW.
For more information, please contact the Ecoflam staff.

PROBES CONNECTION

ACTIVE PROBE CONNECTION
(FOR MODULATING VERSION)

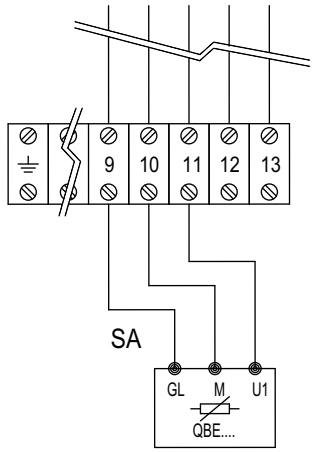

PASSIVE PROBE CONNECTION
(FOR MODULATING VERSION)

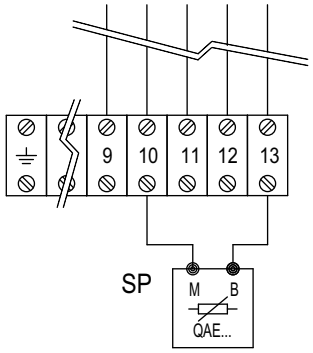

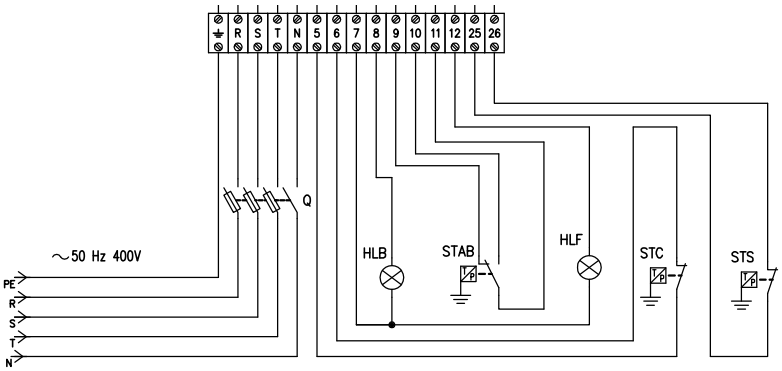

LEGENDA

HLB: lock-out lamp
STAB: two stages thermostat
HLF: burner on flame lamp
STC: boiler thermostat
STS: safety thermostat
SA: active probe
SP: passive probe

START-UP: CHECKING PROCEDURE

CHECKS BEFORE COMMISSIONING:

- That the burner is assembled in accordance with the instructions given here.
- Setting the combustion components.
- All electrical connections must be correct.
- Check the burner motor for correct direction of rotation.
- The heat generator must be ready for operation, and the operating regulations for the heat generator must be observed.
- The heat generator and heating system must be filled with water and the circulating pumps must be in operation.
- The temperature regulator, pressure regulator, low water detectors and any other safety or limiting devices that might be fitted must be connected and operational.
- The exhaust gas duct must be unobstructed and the secondary air system, if available, must be operational.
- An adequate supply of fresh air must be guaranteed.
- Check tank, lines and oil pump are filled with oil and correct oil nozzle is fitted.
- With burner in starting position check that air damper is in “CLOSED” position.
- Check that control box is unlocked and in its original position.
- A standard-compliant measuring point must be available, the exhaust gas duct up to the measuring point must be free of leaks to prevent anomalies in the measurement results.

OIL START-UP

Open all shut-off valves of oil supply system.

- Set fuel selector switch to its “Oil” position.
- Fill pump with oil.
- Mount pressure gauge in the feed line and return line.
- Mount the pressure gauge for checking the pump suction pressure.
- Make sure that the nozzle is size and mounted correctly.

Bleeding of oil system

Shortly start the burner and check for proper direction of rotation. Bleed the oil line and oil pump.

CAUTION: The hydraulic system has been filled with oil by the manufacturer.
This may cause ignition trouble when initially operating the system.
When starting the burner take care to increase the oil pressure slowly to the operating level.

Prior to the initial fuel feed start make a functional test of the burner program flow:

Oil system:

- Open all shut-off valves of the oil supply system.
- The oil solenoid valve in the feed line disconnect on the terminal strip (see Circuit Diagram).
- Start burner and check program flow for correct start-up sequence:
  1. Fan starts.
  2. Pre-ventilating damper.
  3. Air pressure check.
  4. Partial-load air damper.
  5. Ignition.
  6. Valves open (disconnected valve remains closed).
  7. Safety lock-out after expiry of safety period (see control box).
- Reconnect the valve.
- Unlock the control box.

Recording commissioning data

Test			n°1	n°2	n°3	n°4
Date						
Model						
Type oil						
Oil calorific value						
Burner output	min	kW				
Burner output	max	kW				
Flue gas temperature		C°				
Air temperature		C°				
CO_2		%				
CO		ppm				
NOx		ppm				
Performance		%				
Corrective action						
Operator name						
Company						

EXHAUST GAS TEST

To ensure an economically efficient and trouble-free operation of the system it will be necessary to adjust the burner specifically in accordance with the furnace system. This is achieved by means of a fuel-combustion air compound control unit which adjusts the burner to ensure a proper combustion. Exhaust gas tests are required for this purpose.
The percentage CO2 and O2 and the exhaust gas temperature will have to be measured to determine the efficiency and combustion quality.
Prior to any measurement make sure to check the boiler and exhaust gas system for absence of leaks.

Secondary air will falsify the measured results
Check that the exhaust gases have a residual oxygen (O2) content as low as possible and a carbon dioxide (CO2) content as high as possible.
The carbon monoxide content of the exhaust gases must be below the currently applicable specifications in all load stages.
In the fuel oil combustion mode the permissible soot number in the exhaust gas is not allowed to be exceeded

Recommended combustion parameters

Fuel	Recommended (%) CO_2	Recommended (%) O_2
Natural gas	10 ÷ 9	3,1 ÷ 4,8
Light oil	13 ÷ 11,5	3,3 ÷ 5,3
Heavy oil	12,5 ÷ 11	4,2 ÷ 6,2

WARNING: if the installation is above sea level the output of the burner vary base on the diagram.
The regulation of the burner in this case shall take into account the reduced power of the burner due to the missing air.

Ratio between O_2- and CO_2-
for natural gas H (CO_2max = 11,7%)

Ratio between O_2- and CO_2-
for light oil EL (CO_2max = 15,40%)

Ratio between O_2- and CO_2-
for heavy oil S (CO_2max = 15,60%)

$$O_2 = 21 \frac{CO_2max - CO_2gem}{CO_2max} = \%$$

CO_2 gem = % CO_2 measured on dry flue gases

Mean air pressure vs. altitude above sea-level

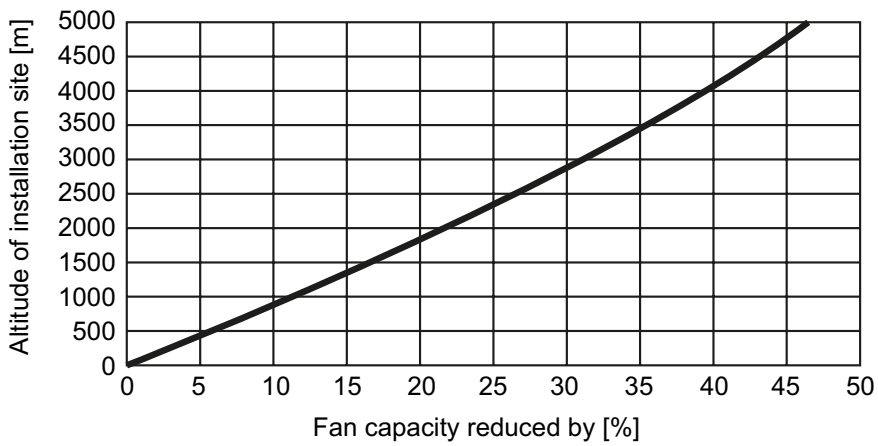

START-UP OIL SIDE

Fuel selection - Start-up

Select the oil operation in order to proceed with start up on the oil side.

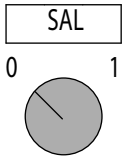

MAIN SWITCH

0 - OFF

1 - ON

! **KMV contactor:** check the air fan motor rotation.
If the rotation if not correct invert the two phases on the power supply.

START UP THE BURNER

The control box starts the pre-purge cycle, the fan motor and the oil motor and opens the air flaps in full open positon.
At the end of pre-purging, the control box drives the servomotors into the igniton positon and starts the igniton transformer.
After a few seconds the control box opens the oil valve and starts the flame. After the flame stabilisaton the control box drives the servomotor in the low flame.
In case of faulty igniton, the control box switches the burner into safety condition, in such a case you must rearm the burner.
Gradually increase burner output from the low flame to the high flame and set oil servomotor curve in order to have a stable flame. Refer to LAMTEC manual attacched.

Adjusting the maximum air flow rate

Air and Oil adjustment are accomplished through LAMTEC parameters setting. Refer to LAMTEC manual attacched.

Firing head setting

The firing head is pre-adjusted at the 50% from the factory. The setting fully open enables to reach the full power of the burner and full close to reach the minimum power of the burner.
The optimal position depends on the output that we need to reach but the default setting shall be modified only when you are not able to reach the suggested combustion value by adjusting the air flow in the maximum flame.

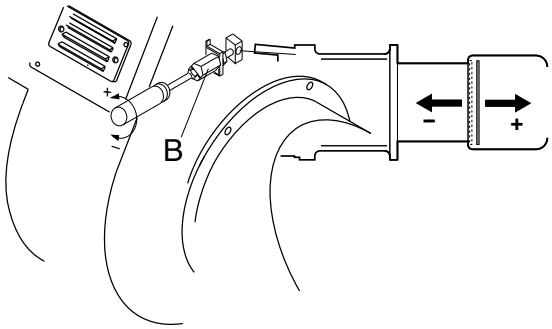

START-UP OIL SIDE

Adjusting the maximum oil flow rate

Put the selector on the oil operation. Adjust the oil pressure reading the value on the return manometer / pressure gauge according to the nozzle tables provided in the appendix. Oil adjustment is accomplished through LAMTEC parameters setting. Refer to LAMTEC manual attacched.
NOTE: the pump pressure is set from the factory at the pressure required nozzle pressure required as per table of nozzle selection in appendix. If the output required is different from the one set from the factory the pressure can be adjusted according to the instruction below.

Servomotor LAMTEC - Air damper motor pre-setting

Air adjustment is accomplished through LAMTEC parameters setting. Refer to LAMTEC manual attacched.

Adjusting the pump pressure

1 - INLET
2 - RETURN
3 - BLEED AND PRESSURE GAUGE PORT
4 - VACUUM GAUGE PORT
5 - PRESSURE ADJUSTMENT
6 - TO NOZZLE

SUNTEC TA....

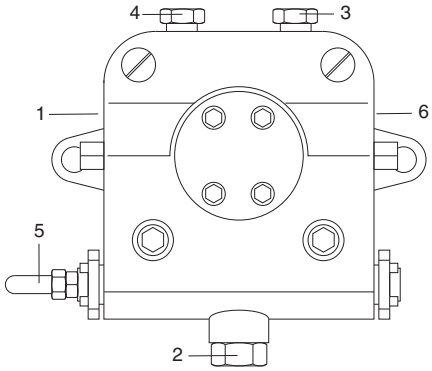

The pump pressure is set at a value of 22-25 bar during the testing of burners. Before starting the burner, bleed the air in the pump through the gauge port. Fill the piping with light oil to facilitate the pump priming. Start the burner and check the pump feeding pressure. In case the pump priming does not take place during the first pre-purging, with a consequent, subsequent lock-out of the burner, rearm the burner's lock-out to restart, by pushing the button on the control box. If, after a successful pump priming, the burner locks-out after the prepurging, due to a fuel pressure drop in the pump, rearm the burner's lock-out to restart the burner.
Do never allow the pump working without oil for more than three minutes.

! **NOTE:** before starting the burner, check that the return pipe is open. An eventual obstruction could damage the pump sealing device.

SUNTEC T.... + TV

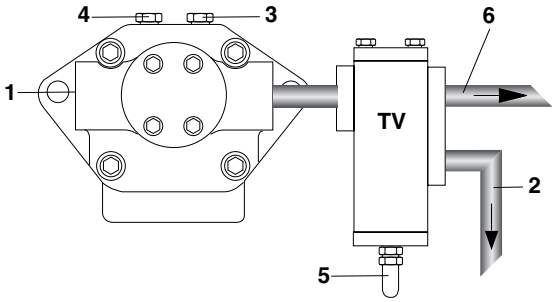

Adjusting the valve TV

1. Remove the cap A of the pressure regulating valve TV.

2. Loosen the fixing nut B and use an Allen wrench on the screw C to adjust the delivery oil pressure. To increase the pressure turn clockwise, to decrease the pressure turn anticlockwise.

3. Tighten the nut B and pay attention not to turn also the adjusting screw.

4. Screw on the cap A, back to its previous position.

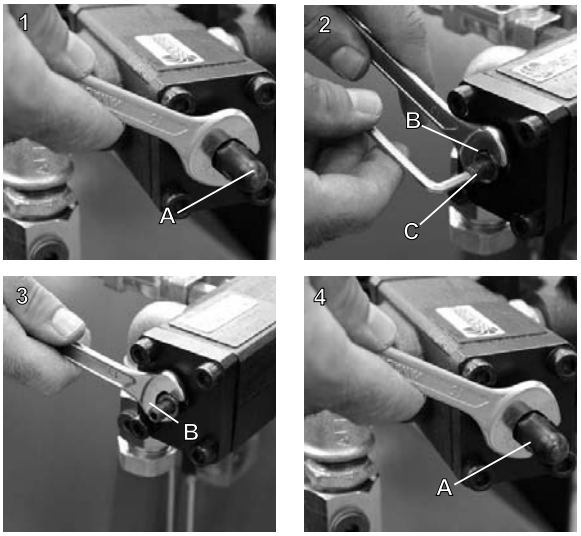

START-UP OIL SIDE

Adjusting the intermediate burner capacity

Oil adjustment is accomplished through LAMTEC parameters setting. Refer to LAMTEC manual attacched.

WARNING: the variable profile of the cam shall have a normal proportional curvature in order to have good combustion values and reduce its mechanical stress breakdown.

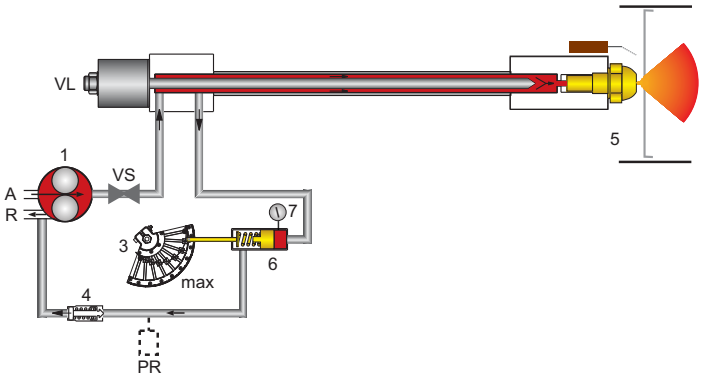

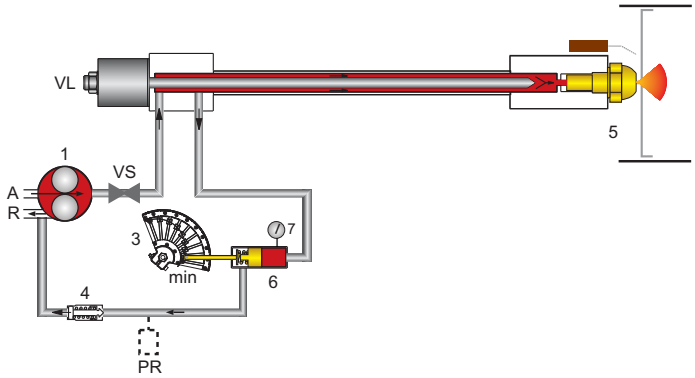

WARNING: Once the setting on the oil has been completed make sure that you close the manometer – pressure switch tap.

LEGENDA

1. Oil pump
VS. Oil safety valve
3. Adjusting cam
4. Check valve
VL. Working valve
PR. Pressostat (optional)
5. Nozzle
6. Pressure regulator
7. Manometer – pressure gauge

MAINTENANCE PROGRAM

! Burner and boiler servicing must only be carried out by authorised qualied personnel at least once a year.
Depending on the type of installation, shorter maintenance intervals may be necessary.
The system operator is advised to take out a maintenance contract to guarantee regular servicing.
WARNING: Use original spare parts.

SAFETY WARNINGS:
1. Turn off the power supply and protect the system from accidental start-up
2. Cut oil
3. Make sure there is no residual power in the system and that the actions in points 1 and 2 have been completed
4. Before opening the burner casing, ensure that the fan motor has stopped completely

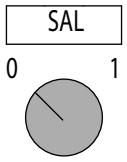

Failure to observe any of these instructions will result in the risk of death or injury!

WORKS RECOMMENDED AS PART OF ANNUAL BURNER MAINTENANCE:

- Emergency stop button function check
- Check burner start characteristics
- Run burner test and input measurement in the boiler room
- Clean the combustion components and replace defective parts if necessary
- Check the combustion head components and make sure that all components are in good condition otherwise replace them
- Replace ignition electrodes and nozzle if necessary and check their correct position after any intervention
- Flame monitor and automatic combustion control unit function check
- Clean the fan wheel and the housing and grease rotating parts if necessary
- Clean the oil filter cartridge with gasoline periodically and check the tightening of the O rings, replace them if necessary
- Make visual inspection of the burner's electrical components and eliminate malfunctions if necessary
- Burner safety devices function check (air pressure/switches if any)
- Commissioning the burner and correct the adjustment values if necessary

NOTES ON REASSEMBLING: Perform the described step in reverse order and make sure to refit components as they were originally assembled and the system is free from leaks. Use only original spare parts.

DRAW UP A MEASUREMENT REPORT ACCORDING TO THE LOCAL REGULATION AND CODES OF PRACTISE OF THE COUNTRY

EXHAUST GAS LOSS
Exhaust gas loss by way of free heat will occur as a result of the temperature difference between the fuel-air mixture entering the furnace chamber and the gases discharged. Any increase in the excess of air and the resultant higher exhaust gas volume will cause the exhaust gas loss to rise. The exhaust gas loss can be calculated as follows:

$$q_A = (t_A - t_L)\frac{A_1}{CO_2} + B$$

q_A = exhaust gas loss [%]
t_A = exhaust gas temperature [°C]
t_L = combustion air temperature [°C]
CO_2 = volumetric content of carbon dioxide [%]

	Light oil EL	Heavy oil S	Natural gas	Town gas	LPG
A1	0,50	0,490	0,370	0,350	0,420
B	0,007	0,007	0,009	0,011	0,008

Example
Data measured in natural gas mode:
CO_2 content of exhaust gases: 10,8%
Exhaust gas temperature: 195°C
Air intake temperature: 22°C

The exhaust gas loss can be calculated as follows:

$$q_{Af} = (195\text{-}22)(\frac{0,37}{10,8} + 0,009) = 7,48\%$$

Data measured in fuel oil mode:
CO_2 content of exhaust gases: 12,8%
Exhaust gas temperature: 195°C
Air intake temperature: 22°C

The exhaust gas loss can be calculated as follows:

$$q_{Af} = (195\text{-}22)(\frac{0,49}{12,8} + 0,007) = 7,83\%$$

MAINTENANCE PROGRAM

REMOVING THE BLAST TUBE

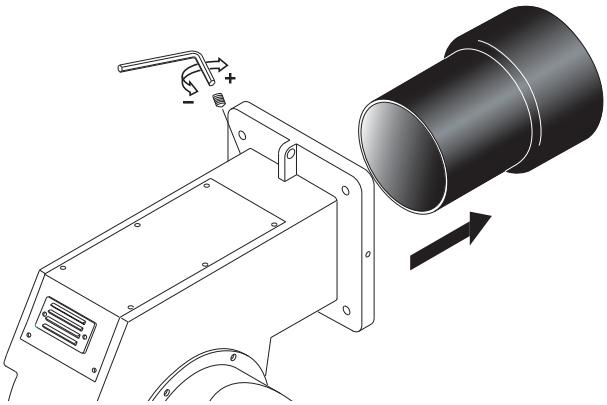

REMOVING THE FIRING HEAD

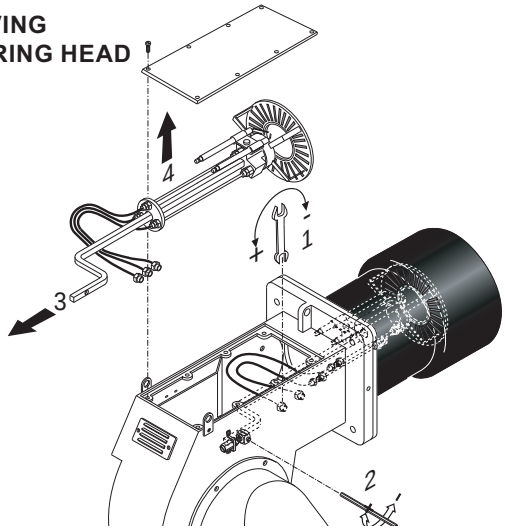

POSITION OF ELECTRODES

ATTENTION:
to remove the nozzle use the suitable box wrench taking care to not damage the electrodes. Check the position of the electrodes after any intervention as wrong position could cause ignition troubles.

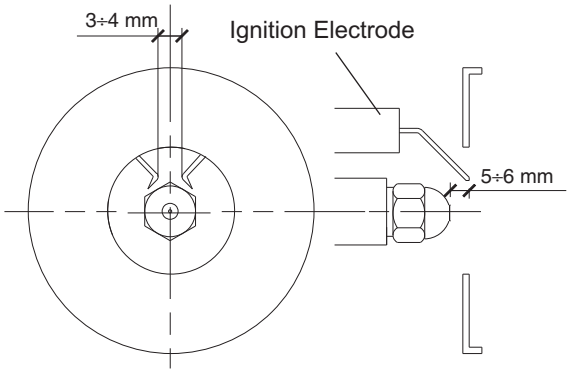

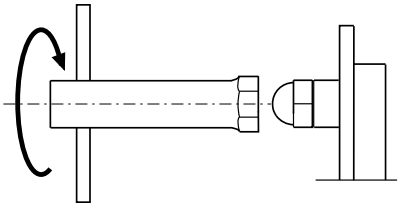

OIL FILTER CLEANING

ATTENTION: Periodically clean oil cartridge with gasoline and replace them if it is necessary!

TROUBLESHOOTING INSTRUCTIONS

For Setting and Error Lists refer to LAMTEC manual attacched.

OPERATING TROUBLE

In case of operating trouble it should be checked whether the system is in proper working order.

Make a check for the following:
1. Availability of fuel.
Availability of gas in the line at sufficiently high pressure.
Availability of fuel oil in the tank (for dual fuel burner).
Correct position of fuel selector switch.
2. Availability of electric power in the burner system.
3. Proper functional order and setting of all control and safety instruments such as temperature controller, safety limiter, water failure cut-out, electrical limit switches, etc.
If the trouble is not found to be due to any of the above-mentioned points it will be necessary to test the burner functions very carefully.

Prevailing conditions:
The burner will be found to be out of operation and in faulty and interlocked position.

Proceed with searching for the cause of the trouble and eliminate it. Unlock the control box by pressing the fault eliminate key and start the burner.
Do not press the fault eliminate key longer than 10 seconds.
The start-up program will be initiated and should be carefully monitored.
The possible cause of the fault may be quickly found by reference to the fault indicator of the control box and watching the start-up and operating program.

APPENDIX

Control box - Display

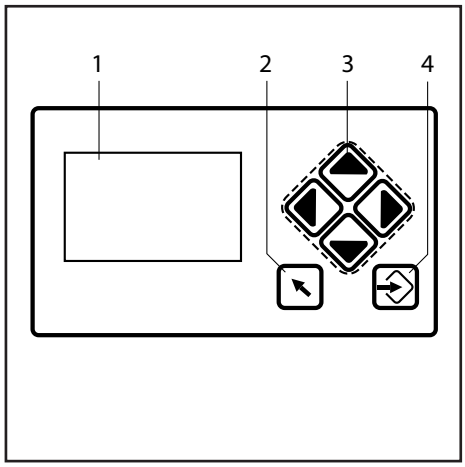

1 Display
2 Back key
3 Cursor keys
4 Enter key

Display
The display shows in pictogram:
• the menu structure
• operating status
• parameters
• error messages


Jump to previous window.


You navigate in the menu using cursor keys. You use 'left' and 'right' keys to move step by step in a selected row. At the end of the selected row the cursor jumps down to the next row, if possible.In a multiline menu use 'up' and 'down' keys to switch to other rows.To display parameters, switch between various fields.


Press ENTER to call up a menu on the start screen. Select a sub-menu in the menu window. Transfer setting values by pressing ENTER key in a parameter window.Use a flushing, red ENTER key to release a fault interlocker.If the ENTER key is permanently lit red, a fault with an automatic restart is displayed.

! Always switch off the power supply before installing or removing the control unit.
Do not attempt to open or carry out repairs on the control unit.

Refer to LAMTEC manual attacched.

APPENDIX

Fluidics nozzle chart

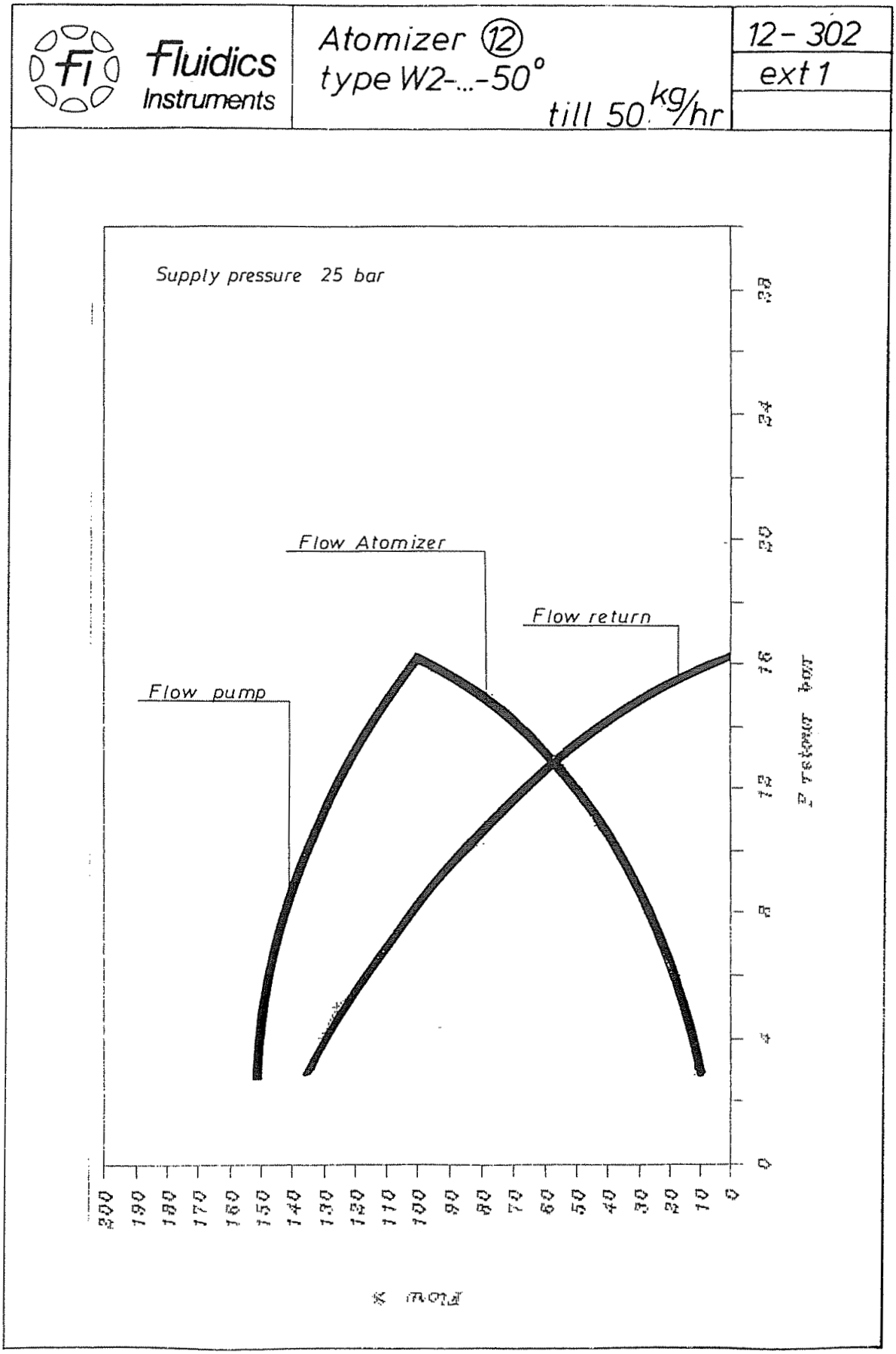

APPENDIX

Fluidics nozzle chart

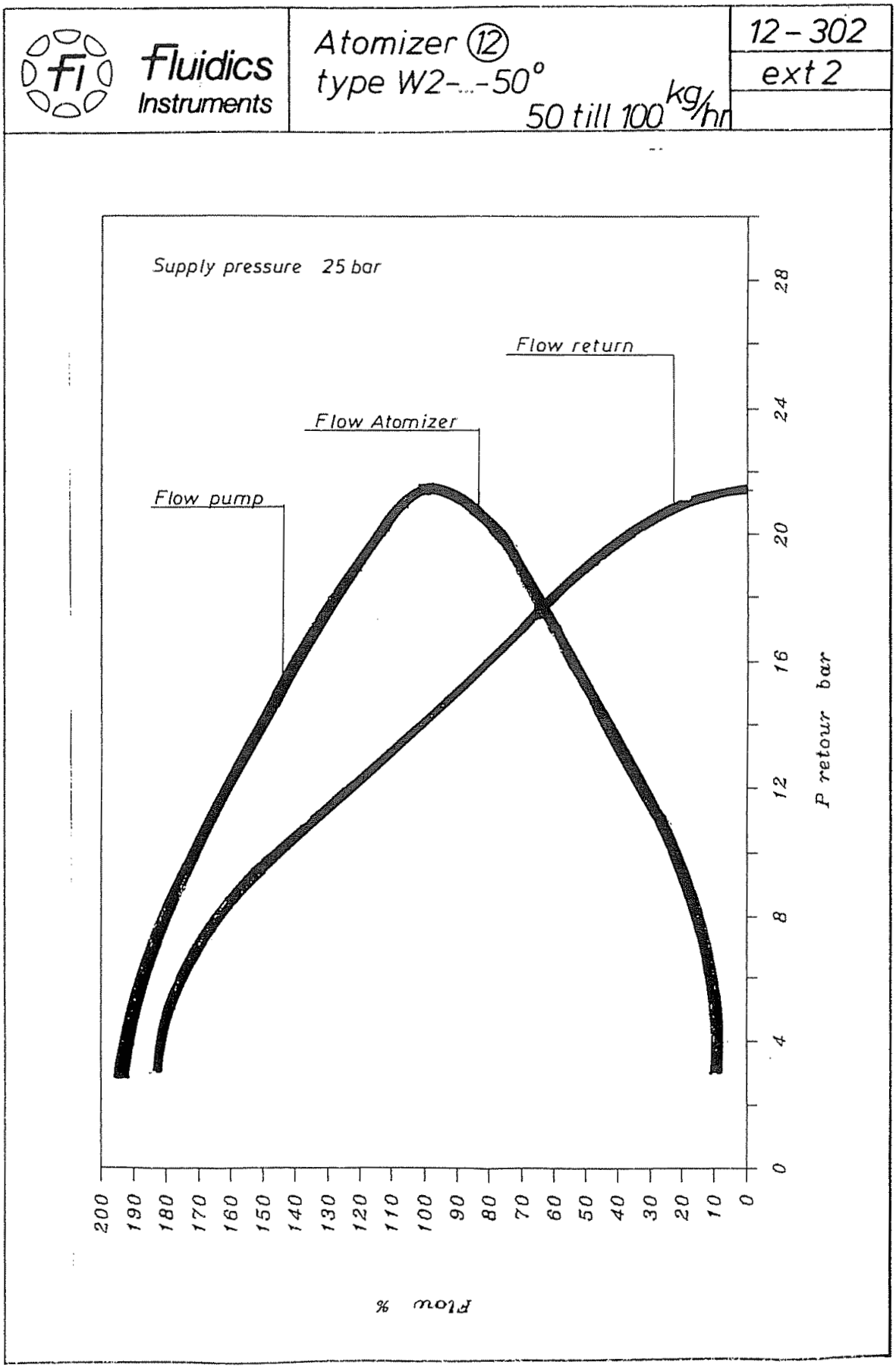

APPENDIX

Fluidics nozzle chart

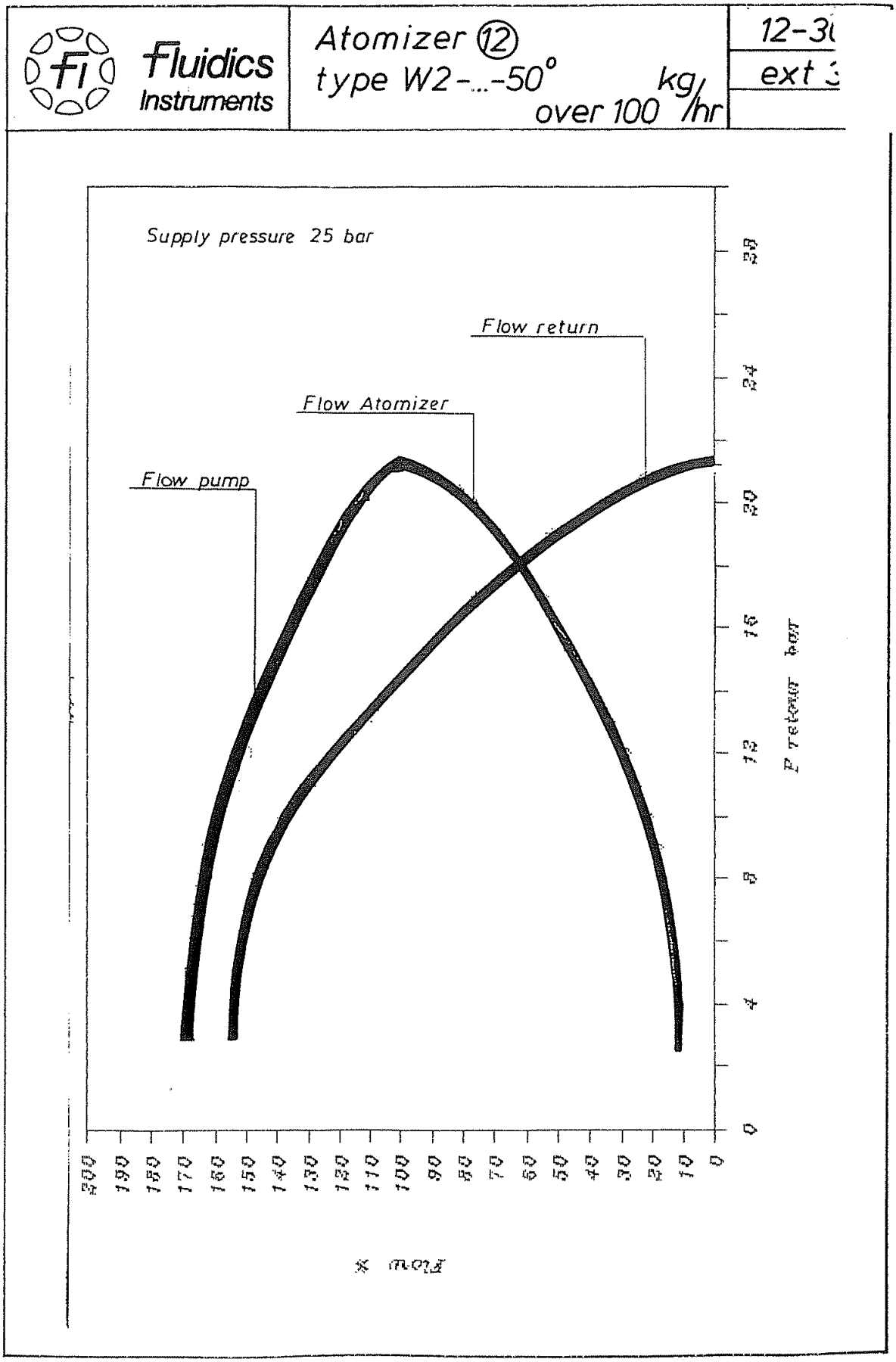

Return pressure [bar]

Nozzle kg/h		Bar	3	4	5	6	7	8	9	10	11	12	13	14	15	16	17	18	19	20	21	22	23	24	25	26	27	28	29
125	A	20	38	39	40	41	42	43	44	45	49	53	57	61	65	69	73	95	100										
125	B	20	300	300	300	295	285	275	275	265	245	230	215	200	185	174	153	140	120										
125	A	25	41	42	43	43	44	45	46	47	48	49	51	53	55	58	60	64	68	72	80	88	105	120					
125	B	25	330	330	330	330	325	320	315	310	305	295	290	285	280	265	240	230	220	200	190	170	150	130					
125	A	30	43	43	43	43	44	44	45	45	46	47	48	50	52	54	54	58	62	64	67	70	75	78	81	90	98	110	130
125	B	30	360	360	359	358	357	356	355	355	350	345	340	335	330	320	310	300	290	280	270	255	240	220	205	190	175	155	135
150	A	20	47	48	50	52	54	56	58	61	64	68	72	78	85	92	100	110											
150	B	20	280	279	278	277	276	276	275	268	260	240	230	215	190	175	160	145	125										
150	A	25	52	52	53	54	55	56	57	58	60	64	68	72	76	80	85	90	97	105	118	128	142						
150	B	25	325	325	310	300	300	290	285	280	275	270	265	260	255	250	240	230	220	210	190	170	160						
150	A	30	57	56	55	54	54	55	57	58	59	60	62	65	68	72	75	80	84	88	93	99	105	112	120	130	145	145	
150	B	30	340	340	340	338	336	334	332	330	328	324	320	315	310	300	290	280	270	260	250	240	230	220	210	190	180	160	
175	A	20	55	57	59	62	64	66	68	72	75	80	82	90	95	102	115	130	150										
175	B	20	285	280	275	270	270	265	265	260	255	250	245	240	230	200	185	170	150										
175	A	25	60	61	62	63	64	65	66	68	70	72	78	80	82	85	92	98	105	110	120	140	160						
175	B	25	330	330	330	330	325	325	325	320	315	310	300	295	280	270	260	252	245	235	225	200	180						
175	A	30	67	68	69	70	71	72	73	74	75	76	77	79	80	82	85	90	92	95	100	105	110	118	125	140	160	180	
175	B	30	360	360	360	355	355	350	350	345	345	340	340	335	330	330	325	320	310	300	290	280	270	260	250	240	225	200	
200	A	20	57	58	59	60	62	65	68	72	78	82	92	100	110	125	140	160	180										
200	B	20	350	350	350	350	345	345	340	330	325	300	285	275	260	245	220	200	190										
200	A	25	65	66	67	68	70	71	73	75	78	81	86	90	95	100	108	115	122	135	150	170	190						
200	B	25	400	400	400	400	390	385	380	375	370	365	360	350	340	330	320	300	285	270	260	245	220						
200	A	30	66	67	68	68	69	70	70	71	72	75	78	80	82	88	92	98	102	108	113	118	125	130	140	155	175	225	
200	B	30	460	460	460	460	458	456	452	448	440	430	420	405	390	380	370	360	350	342	335	325	315	300	290	275	260	245	
225	A	20	65	68	70	72	76	79	84	88	91	94	102	110	118	125	140	160	200										
225	B	20	420	410	405	400	390	382	376	370	350	345	335	320	300	280	265	250											
225	A	25	72	73	74	75	75	76	79	82	85	88	91	95	100	105	115	120	130	145	160	180	225						
225	B	25	475	468	460	460	460	455	455	450	440	430	420	410	400	380	365	345	325	315	300	275	260						
225	A	30	78	78	78	79	79	80	82	84	86	88	90	91	94	98	100	110	115	118	125	130	135	145	155	175	200	240	
225	B	30	510	510	505	505	503	500	495	490	485	480	475	470	465	455	445	435	425	410	392	380	370	360	350	325	300	275	
250	A	20	76	78	80	84	88	90	94	105	110	118	125	135	145	160	180	220											
250	B	20	425	415	408	403	400	380	375	365	355	345	330	315	300	285	275	250											
250	A	25	87	88	88	89	91	94	96	100	104	108	112	122	132	142	155	162	175	180	210	225	250						
250	B	25	480	475	475	470	465	465	460	455	445	435	425	415	405	382	365	350	345	330	320	300	280						
250	A	30	89	90	90	92	94	95	96	98	102	106	109	112	118	124	136	144	155	160	170	180	190	210	225	235	265		
250	B	30	520	518	518	515	512	512	510	510	508	504	500	490	480	470	460	450	440	430	420	410	390	375	360	340	320		
275	A	20	80	84	88	92	96	98	104	112	118	125	135	142	152	170	190	230											
275	B	20	475	475	470	466	460	445	430	420	405	390	370	360	350	330	310	285											
275	A	25	92	93	94	95	96	98	100	105	110	118	120	130	138	145	155	164	178	195	210	240	265						
275	B	25	525	525	525	520	515	510	505	500	495	490	480	470	460	450	440	425	400	375	350	325	300						
275	A	30	105	106	107	108	109	110	112	116	118	120	125	130	135	138	142	148	154	160	170	180	190	210	225	250	280		
275	B	30	600	600	600	600	600	600	595	590	585	580	570	565	543	530	515	500	490	475	465	450	440	425	400	380	360	330	

Supply: 25 bar Output [kg/h] A = nozzle output B = pump output

Bergonzo nozzle tables

Return pressure [bar]

Nozzle kg/h		Bar	3	4	5	6	7	8	9	10	11	12	13	14	15	16	17	18	19	20	21	22	23	24	25	26	27	28	29
300	A	20	85	88	90	94	98	100	105	110	115	125	135	145	155	170	190	225	275										
300	B	20	480	480	480	476	470	465	460	450	435	415	400	375	365	350	325	300	280										
300	A	25	100	100	100	102	104	106	108	110	113	116	120	125	135	145	155	165	180	200	225	255	310						
300	B	25	550	550	545	540	535	530	520	510	500	490	482	475	463	450	440	430	415	390	370	350	310						
300	A	30	105	106	107	108	110	112	114	116	118	120	124	128	132	136	140	146	152	162	175	182	195	210	230	260	290	340	
300	B	30	625	625	625	620	615	610	605	600	590	580	570	560	550	540	530	520	510	495	480	465	450	430	410	390	375	350	
325	A	20	95	96	97	98	100	103	106	110	120	130	140	150	165	200	240	260											
325	B	20	550	545	540	535	530	520	510	500	480	460	440	420	400	375	355	325											
325	A	25	108	107	108	109	110	112	114	116	118	125	132	141	150	160	170	180	200	225	250	280	330						
325	B	25	630	630	630	625	620	615	610	605	600	585	570	565	535	520	500	480	460	440	410	385	360						
325	A	30	115	115	116	117	118	119	120	122	126	130	135	140	147	152	160	170	180	190	200	210	225	242	260	280	310	330	
325	B	30	720	715	710	705	702	700	700	690	680	670	655	620	610	600	580	570	550	520	500	480	460	440	420	400	380		
350	A	20	105	107	108	109	110	115	118	125	135	145	155	170	190	215	240	275											
350	B	20	590	580	570	560	550	540	530	500	480	465	450	440	400	375	360	340											
350	A	25	120	122	124	126	128	132	134	136	138	140	145	150	155	165	175	185	200	225	255	275	350						
350	B	25	620	620	620	615	614	612	610	605	600	595	575	565	550	530	510	490	470	450	410	380	360						
350	A	30	125	125	127	129	131	133	135	138	141	143	145	150	155	160	168	174	184	195	210	225	245	265	280	325	370		
350	B	30	710	710	708	704	703	702	700	690	680	670	660	650	640	630	615	600	580	560	540	520	500	475	440	425	400		
375	A	20	110	114	118	127	134	137	140	145	152	162	170	180	195	210	250	290											
375	B	20	600	590	580	575	560	550	540	530	515	500	485	465	450	425	400	370											
375	A	25	130	130	130	132	134	136	138	140	146	150	155	160	170	180	195	210	230	250	275	320	375						
375	B	25	690	690	680	680	670	660	650	630	620	610	600	580	560	540	520	500	485	465	450	425	400						
375	A	30	135	136	137	138	139	140	142	144	148	151	155	160	166	172	180	190	200	210	225	235	250	270	300	340	370		
375	B	30	790	780	770	760	750	740	730	720	710	700	690	682	674	666	658	650	632	615	600	575	545	530	525	480			
400	A	20	130	135	140	145	150	155	160	170	180	190	205	220	240	263	330	370											
400	B	20	650	650	650	640	630	620	610	600	580	560	540	500	475	420	420	380											
400	A	25	130	135	140	145	150	155	160	170	178	185	195	202	212	225	250	270	290	320	340	375	400						
400	B	25	725	725	720	720	715	710	705	700	690	670	640	630	600	580	565	550	525	480	470	450	425						
400	A	30	152	153	154	155	157	162	165	170	176	180	190	200	210	220	230	245	260	270	285	300	325	365	400	425	450		
400	B	30	845	840	835	830	825	820	815	810	805	800	790	780	760	740	715	690	660	650	620	600	580	560	540	520	500		
425	A	20	120	125	130	135	140	145	150	165	175	185	210	230	250	275	300	350											
425	B	20	700	690	680	670	660	650	635	615	600	575	550	525	505	465	435	400											
425	A	25	145	146	147	148	149	150	154	157	160	170	180	190	210	225	245	265	280	320	360	400							
425	B	25	800	800	800	790	780	770	760	750	725	700	685	670	650	625	600	575	550	510	480	450							
425	A	30	150	150	149	148	147	146	145	148	154	160	168	177	185	195	205	225	238	250	270	290	310	325	360	380	450		
425	B	30	880	875	870	865	860	855	850	840	830	820	810	800	780	760	740	720	700	685	670	650	610	590	570	550	510		
450	A	20	130	135	140	145	150	158	165	175	185	200	210	230	255	280	320	375											
450	B	20	700	690	680	670	660	650	630	615	600	580	550	520	490	460	425	400											
450	A	25	145	145	148	151	154	158	162	165	170	180	190	200	220	240	255	280	310	350	390	450							
450	B	25	810	808	806	803	800	785	767	750	730	710	690	670	650	625	600	580	560	530	500	475							
450	A	30	155	156	157	158	160	162	165	170	175	180	187	194	200	210	220	230	240	260	275	290	310	340	375	420			
450	B	30	890	885	880	875	870	865	860	850	840	830	820	810	800	790	780	770	740	710	690	670	630	610	560	520	500		

Supply: 25 bar Output [kg/h] A = nozzle output B = pump output

Return pressure [bar]

Nozzle kg/h		Bar	3	4	5	6	7	8	9	10	11	12	13	14	15	16	17	18	19	20	21	22	23	24	25	26	27	28	29
475	A	20	145	148	152	158	165	170	180	195	200	210	230	250	275	300	340	410											
475	B	20	740	735	730	720	710	700	680	660	640	620	490	560	530	500	475	450											
475	A	25	140	162	164	166	168	170	175	180	188	195	205	215	225	245	265	280	305	340	380	480							
475	B	25	850	845	840	835	830	820	810	800	790	780	760	740	720	700	675	650	620	580	540	510							
475	A	30	170	171	172	173	174	176	177	178	180	186	194	200	210	225	235	245	255	275	285	305	330	365	400	460	540		
475	B	30	910	909	908	907	906	904	902	900	890	880	865	850	835	820	800	785	765	750	725	700	675	660	635	600	560		
500	A	20	150	155	160	167	174	180	190	205	220	235	250	275	300	350	400												
500	B	20	740	730	720	710	700	685	665	650	630	610	590	570	550	520	490												
500	A	25	174	175	178	180	185	190	195	200	210	220	230	245	250	265	285	315	350	380	435	510							
500	B	25	845	840	835	830	825	820	815	810	800	780	765	750	725	700	675	650	625	600	580	550							
500	A	30	180	185	190	195	200	206	212	218	225	238	242	250	262	275	288	300	316	332	350	375	400	425	475	520			
500	B	30	945	940	935	930	925	920	915	910	905	900	880	865	850	835	815	800	775	750	725	700	685	650	630	610			
575	A	20	105	110	115	125	135	150	160	180	200	230	265	300	350	425	500												
575	B	20	910	900	890	870	830	800	780	750	720	690	670	640	600	580	530												
575	A	25	110	113	115	125	130	140	150	160	170	190	210	230	260	300	340	375	425	500	550								
575	B	25	1000	990	975	960	950	930	910	890	870	850	830	800	780	750	720	700	670	630	600								
575	A	30	120	122	125	127	130	135	140	145	155	165	180	195	210	230	255	280	310	340	375	420	475	530	600				
575	B	30	1190	1170	1150	1120	1100	1080	1050	1020	1000	990	975	965	950	920	900	880	850	820	800	770	740	700	670				
600	A	20	115	120	130	140	150	165	180	200	225	250	280	325	375	440	520												
600	B	20	920	900	890	850	820	800	780	760	740	710	690	670	650	610	580												
600	A	25	120	125	130	140	150	160	170	180	190	220	240	260	280	330	370	410	460	530	600								
600	B	25	1050	1030	1010	1000	990	980	960	940	920	900	880	840	810	790	760	730	700	680	650								
600	A	30	135	140	145	150	155	160	165	170	185	200	215	235	250	270	290	310	340	370	400	450	500	550	640				
600	B	30	1120	1115	1110	1105	1100	1095	1090	1085	1075	1050	1020	1000	980	960	940	920	900	880	850	825	800	780	720				
650	A	20	120	130	140	155	165	180	190	220	240	270	320	370	425	510													
650	B	20	990	950	920	900	890	870	850	800	780	760	710	680	660	620													
650	A	25	130	135	140	145	155	165	175	185	200	225	250	270	300	330	370	420	475	580									
650	B	25	1100	1090	1080	1060	1040	1000	990	970	945	920	900	880	850	820	800	780	750	720									
650	A	30	145	150	155	160	165	170	175	185	200	210	230	250	270	290	310	340	370	400	450	500	580	650					
650	B	30	1200	1195	1190	1185	1175	1150	1120	1100	1085	1065	1045	1020	1000	980	960	940	920	900	880	845	815	770					
700	A	20	130	140	155	170	180	200	230	250	280	325	375	425	500	630													
700	B	20	1000	980	960	940	920	900	880	850	830	800	780	740	700	680													
700	A	25	140	145	150	160	170	190	200	225	250	275	300	325	360	400	450	525	600	700									
700	B	25	1150	1130	1110	1100	1080	1060	1040	1020	1000	980	960	940	920	900	870	840	810	780									
700	A	30	150	155	160	170	180	190	200	215	230	250	270	290	320	345	370	400	440	480	540	600	680	780					
700	B	30	1250	1240	1230	1220	1210	1200	1180	1160	1140	1120	1100	1080	1060	1040	1020	1000	970	940	910	890	870	850					
750	A	25	150	155	160	170	175	185	195	200	225	240	260	280	320	350	375	400	500	600	750								
750	B	25	1200	1180	1160	1140	1120	1100	1080	1060	1040	1020	1000	980	965	950	930	900	880	850	820								
800	A	25	160	165	170	175	185	190	210	225	250	270	290	325	350	400	480	580	680	800									
800	B	25	1230	1215	1200	1180	1140	1120	1100	1080	1050	1020	1000	980	960	940	920	900	890	870									
900	A	25	300	325	350	375	400	430	470	500	550	600	650	700	750	800	850	900											
900	B	25	1350	1330	1310	1300	1285	1275	1260	1245	1230	1215	1200	1180	1160	1140	100	970											

Supply: 25 bar

Output [kg/h]

A = nozzle output

B = pump output

APPENDIX

Pumps and pressure regulators

PUMP SUNTEC TA TECHNICAL DATA

Note: All TA models are delivered for two-pipe system (by-pass plug fitted in vacuum gauge port).
For one-pipe system, the by-pass plug must be removed and the return port sealed by steel plug and washer.

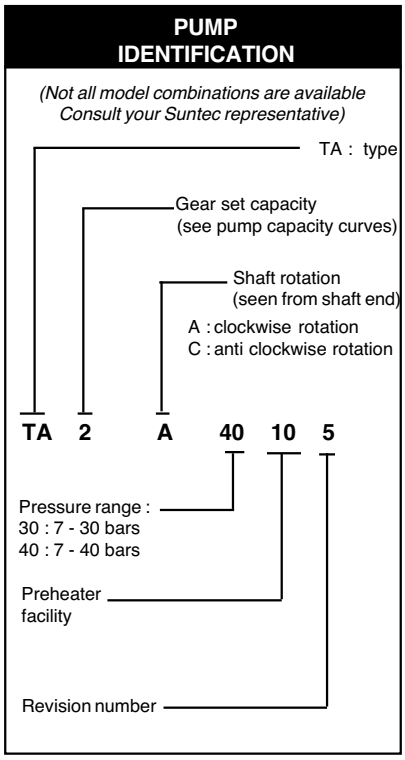

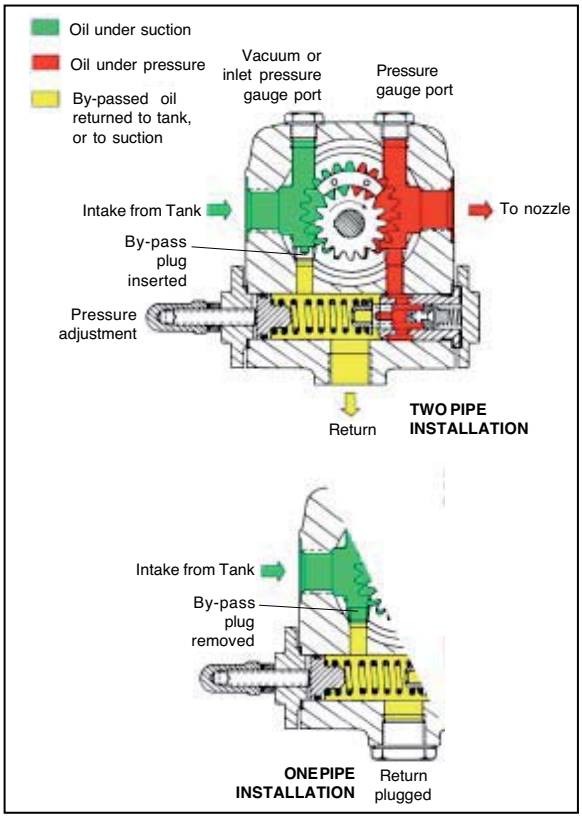

General

Mounting	Flange mounting
Connection threads	Cylindrical according to ISO 228/1
Inlet end return	G 1/2"
To nozzle	G 1/2"
Pressure gauge port	G 1/4"
Vacuum gauge port	G 1/4"
Shaft	Ø 12 mm
By-pass plug	Inserted in vacuum gauge port for 2 pipe system; to be removed with a 3/16" Allen key for 1 pipe system
Weight	5,4 kg (TA2) - 5,7 kg (TA3) 6 kg (TA4) - 6,4 kg (TA5)

Hydraulic data

Nozzle pressure ranges	30 : 7 - 30 bars 40 : 7 - 40 bars
Delivery pressure setting	30 bars
Operating viscosity	4 - 450 cSt
Oil temperature	0 - 140°C max. in the pump
Inlet pressure	light oil : 0,45 bars max. vacuum to prevent air separation from oil heavy oil : 5 bars max.
Return pressure	light oil : 5 bars max. heavy oil : 5 bars max.
Rated speed	3600 rpm max.
Starting torque	0,3 N.m

Choice of heater

Cartridge	Ø 12 mm
Fitting	according to DIN 40430, NFC 68190 (N°9 elec.)
Rating	80-100 W

Pump capacity

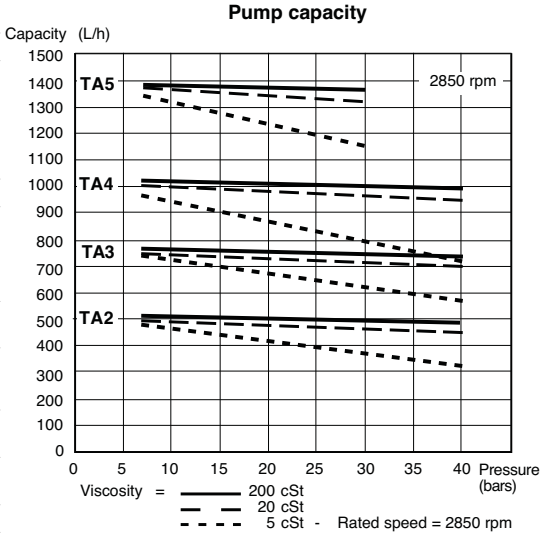

Data shown are for new pumps, with no allowance for wear.

APPENDIX

Pumps and pressure regulators

PUMP SUNTEC T TECHNICAL DATA

Note: The bypass plug inserted beween high pressure and shaft seal is only intended to change the pump rotation, check the presence of this plug with a 4 mm Allen key in the pressure outlet of the pump.
Caution : changing the direction of pump rotation involves changing of all pump connections.

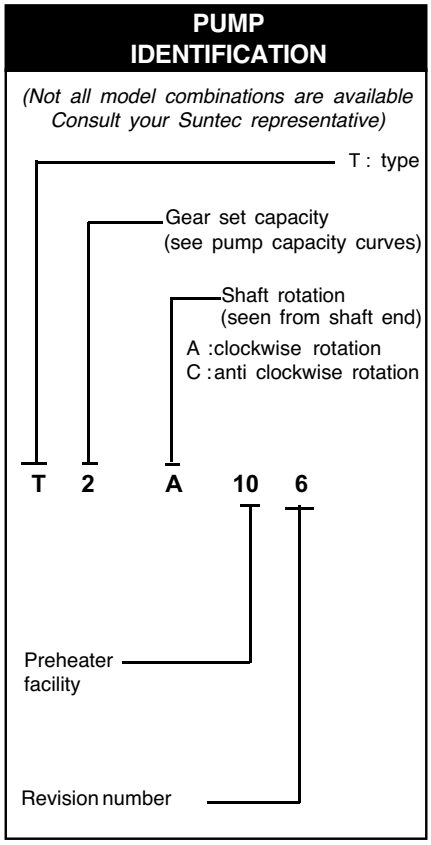

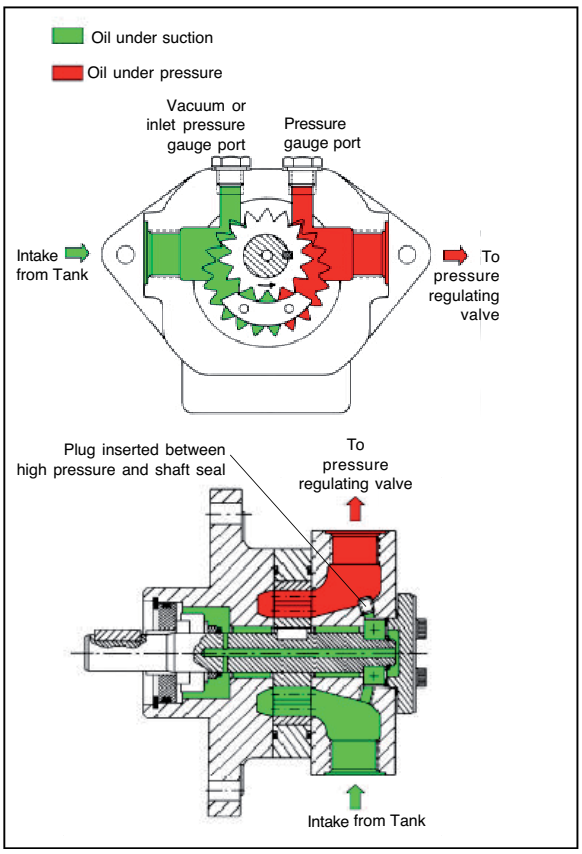

General

Mounting	Flange mounting		
Connection threads	Cylindrical according to ISO 228/1		
Inlet end return	G 1/2"		
To nozzle	G 1/2"		
Pressure gauge port	G 1/4"		
Vacuum gauge port	G 1/4"		
Shaft	Ø 20 mm		
Weight	7,8 kg (T2)	-	8,1 kg (T3)
	8,7 kg (T4)	-	9,4 kg (T5)

Hydraulic data

Nozzle pressure range	40 bars max. (T2, T3, T4)	
	30 bars max. (T5)	
Operating viscosity	4 - 450 cSt	
Oil temperature	0 - 150°C max. in the pump	
Inlet pressure	light oil :	0,45 bars max. vacuum to prevent air separation from oil
	heavy oil :	5 bars max.
Rated speed	3600 rpm max.	
Starting torque	0,4 N.m	

Choice of heater

Cartridge	Ø 12 mm
Fitting	according to DIN 40430, NFC 68190 (N°9 elec.)
Rating	80-100 W

Pump capacity

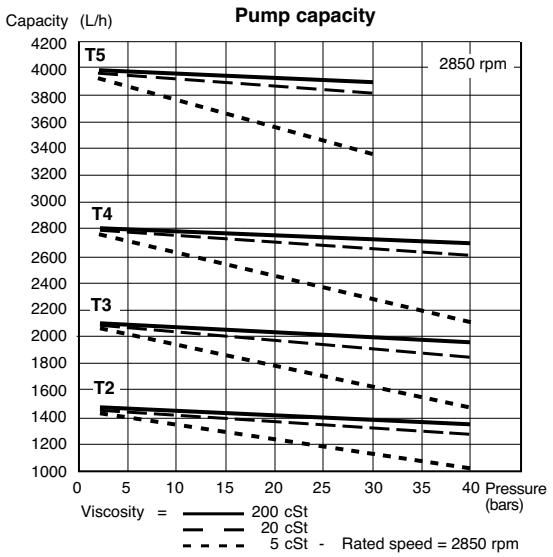

Data shown are for new pumps, with no allowance for wear.

Power consumption

APPENDIX

Pumps and pressure regulators

VALVE SUNTEC TV TECHNICAL DATA

The pressure of the nozzle line is adjusted with the adjusting screw of the TV valve. The oil in excess to nozzle requirement is dumped to the return. Two pipe system : oil in excess is returned to tank. One pipe system : oil in excess is returned to pump suction.

VALVE IDENTIFICATION

(Not all model combinations are available Consult your Suntec representative)

TV : Pressure regulating valve

Pressure range :
10 : 2 - 10 bars
40 : 7 - 40 bars

TV 40 01 1

Regulation type :
01 : by screw
02 : by piston, for modulating purpose

Revision number

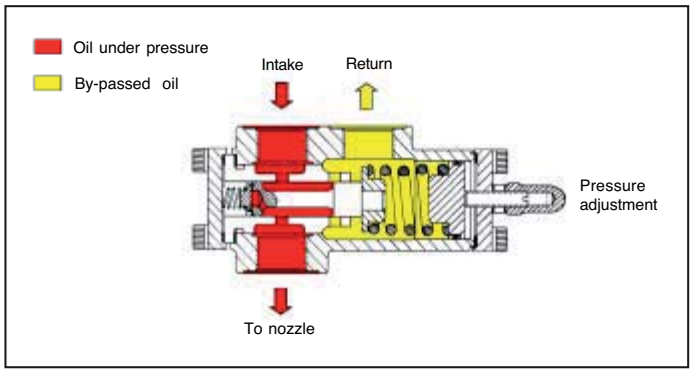

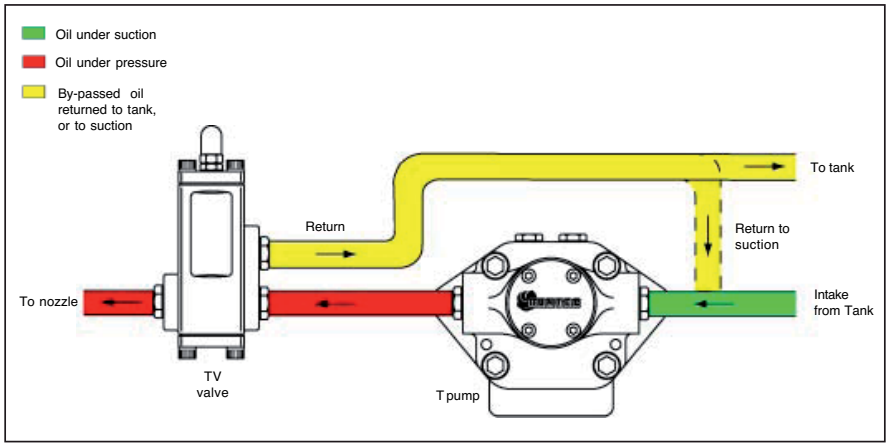

General

Connection threads	Cylindrical according to ISO 228/1
Inlet	G 3/4"
To nozzle	G 3/4"
Return	G 3/4"
Weight	3 kg

Hydraulic data

Pressure ranges	10 : 2 - 10 bars (delivery pressure setting : 7 bars)
	40 : 7 - 40 bars (delivery pressure setting : 20 bars)
Operating viscosity	4 - 450 cSt
Oil temperature	0 - 150°C max. in the valve.

MOUNTING POSITION

TV valve may be mounted in any position.

PRESSURE ADJUSTMENT

Remove cap-nut ❶ and washer ❷, unscrew lock-nut ❹.
To increase pressure, turn adjusting screw ❸ clockwise.
To decrease the pressure, turn screw anticlockwise.
Block lock-nut ❹, refasten washer ❷ and cap-nut ❶.

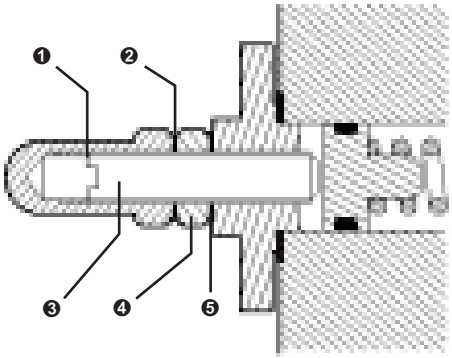

❶ cap-nut
❷ adjusting screw
❸ washer
❹ lock-nut
❺ washer

APPENDIX

Electrical diagrams

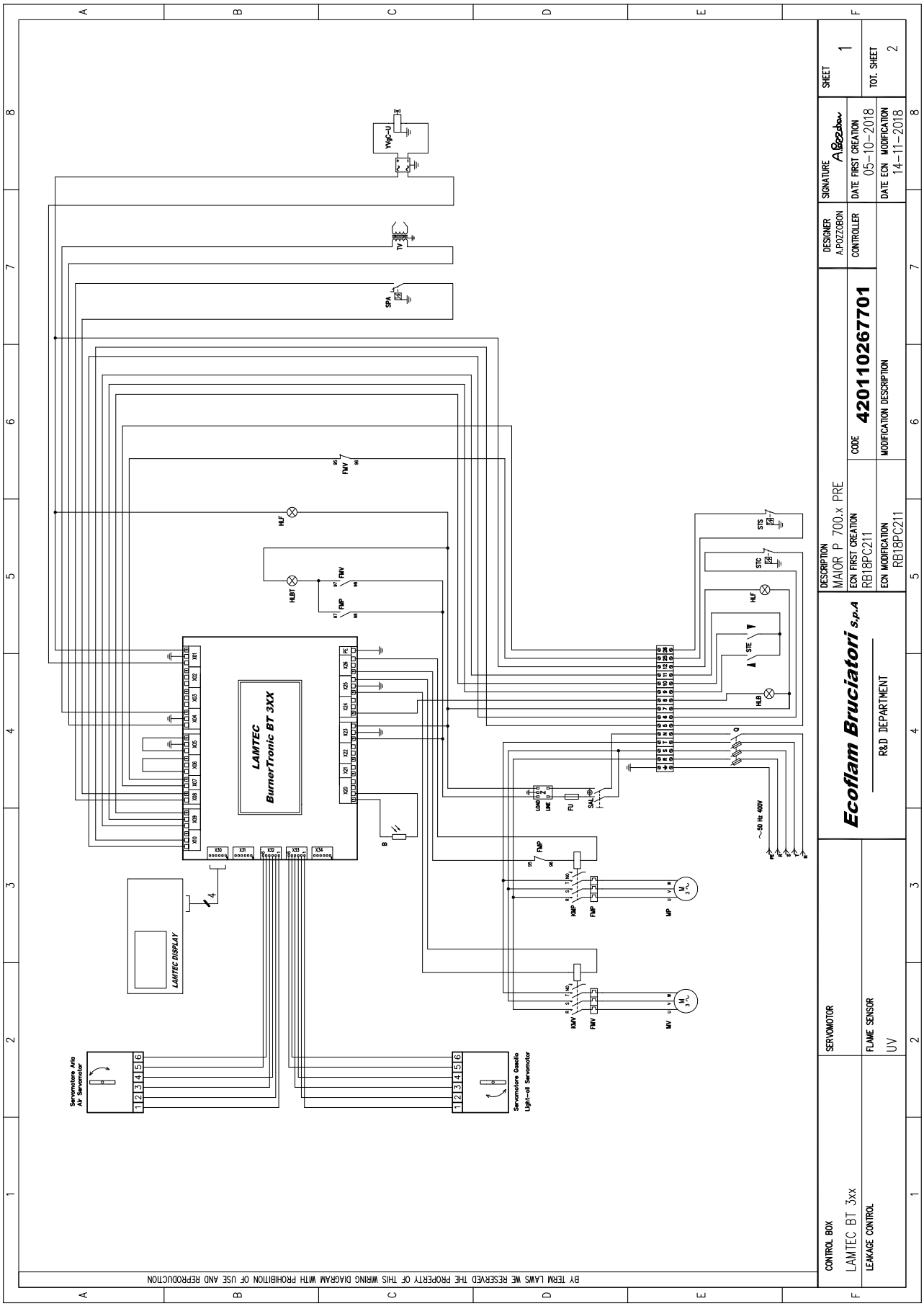

Ecoflam

APPENDIX

Electrical diagrams

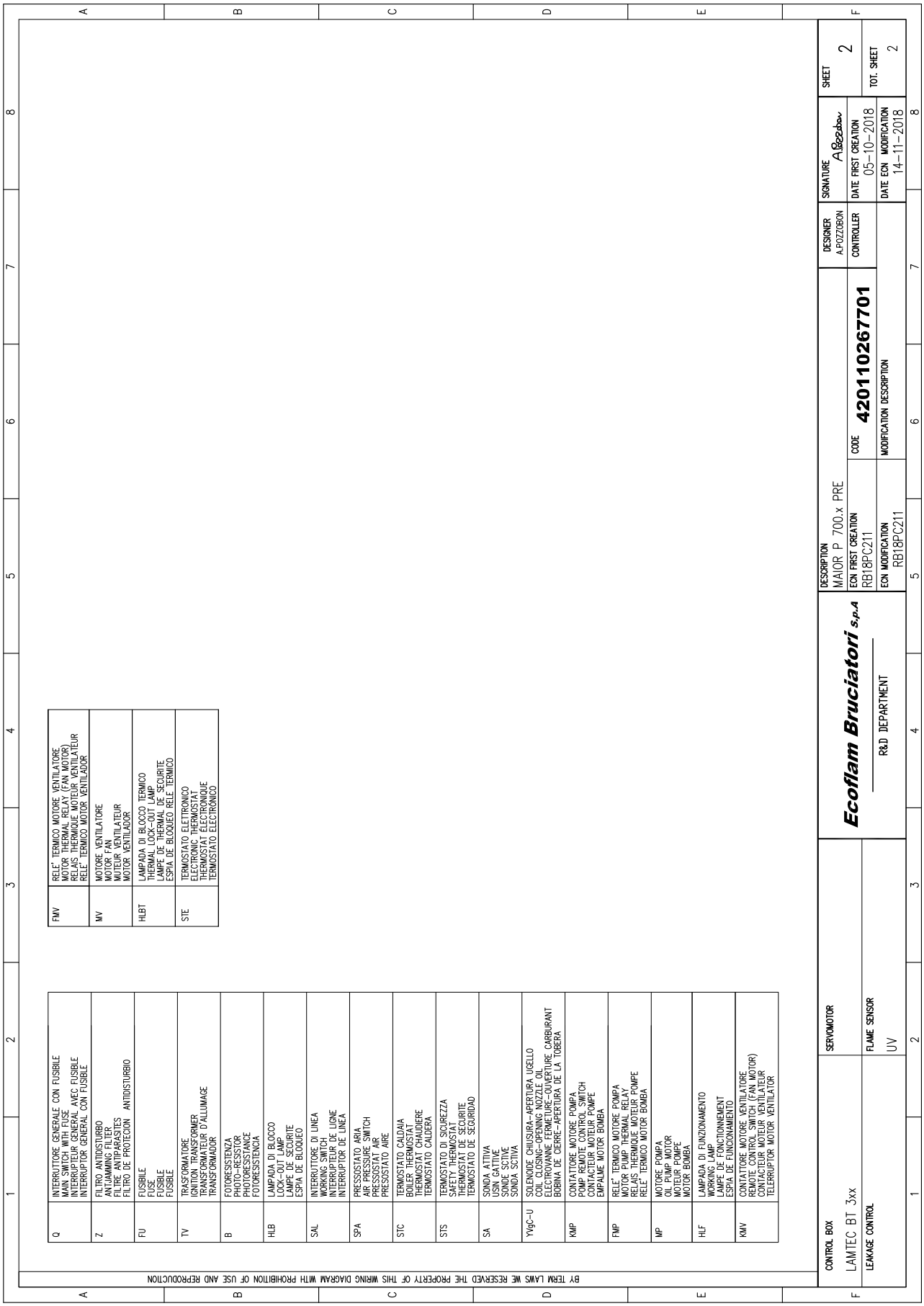

APPENDIX

Spare parts

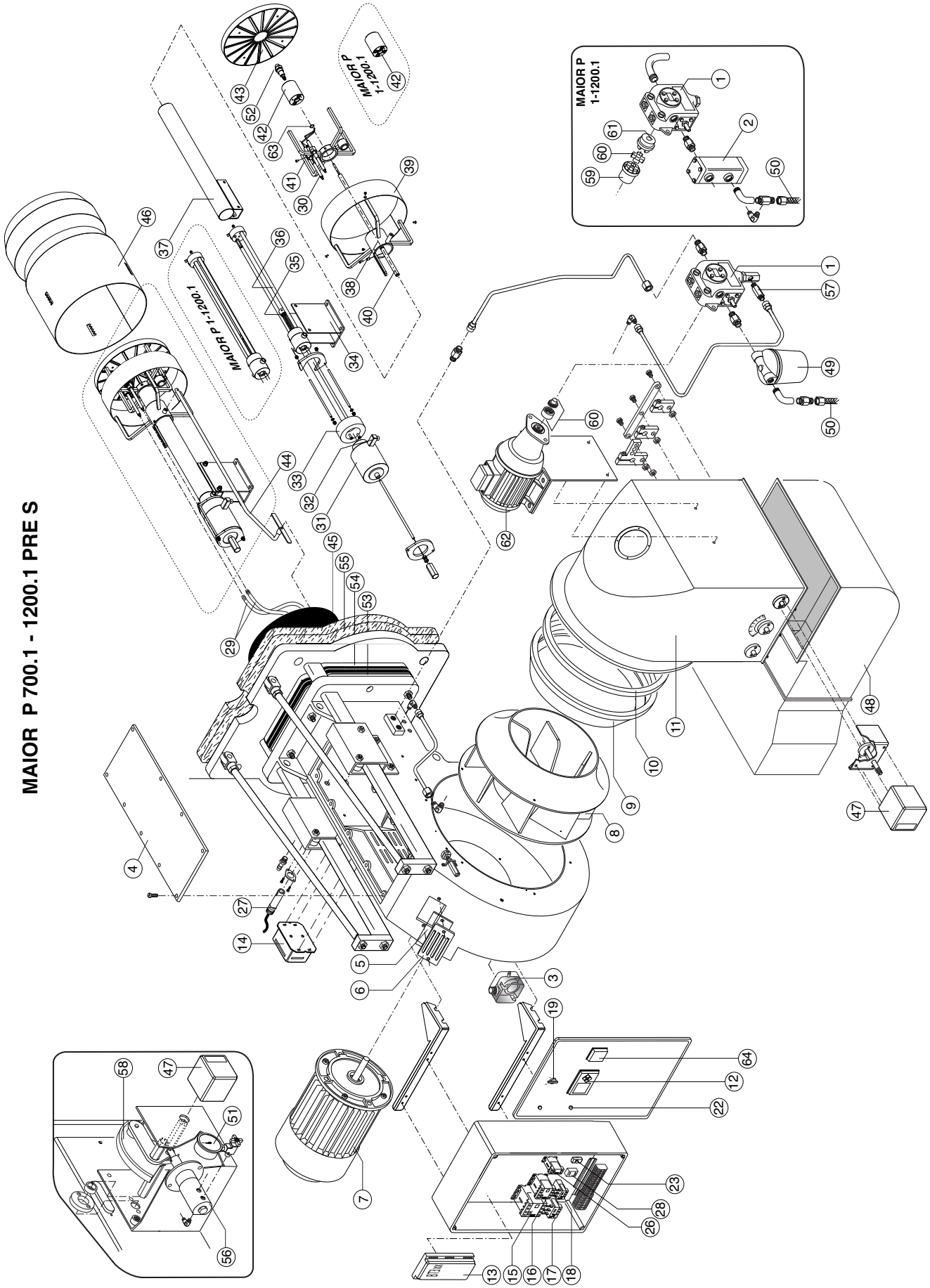

Ecoflam

APPENDIX

Spare parts list

			MAIOR P 700.1 PRE S
N°	DESCRIPTION		code
1	OIL PUMP	SUNTEC TA5C30106	65322993
2	OIL VALVE		-
3	AIR PRESSURE SWITCH	LGW 3 A4 (0,4-3 MBAR)	65323039
4	COVER		65324059
5	GLASS		65320487
6	PEEP WINDOW FRAME		65320488
7	MOTOR	15 KW	65326334
8	FAN	GF560R ˜530	65325905
9	AIR CONVEYOR		65320648
10	CONVEYOR RING		65320646
11	AIR INTAKE		840050299901
12	DISPLAY	LAMTEC UI300	65326932
13	CONTROL BOX	BT 320 667R1320-1	65326933
14	IGNITION TRANSFORMER	BRAHMA T8	65323222
15	REMOTE CONTROL SWITCH	AEG LS18K.00	65323137
16	REMOTE CONTROL SWITCH (PUMP)	AEG LS05.10	65323132
17	MOTOR THERMAL RELAY	AEG B18K-320 25-32A	65324428
18	MOTOR THERMAL RELAY (PUMP)	AEG 4-6.3A	65323114
19	MAIN SELECTOR	COMEPI	65324098
20	RESET BUTTON		-
21	SELECTOR		-
22	LAMP	LYVIA 10X28 BA9	65324100
		RED LED	65325033
		GREEN LED	65325034
23	FUSE SUPPORT	HK 520	65324279
24	RELAY BASE		-
25	RELAY		-
26	TIMER		-
27	PHOTORESISTOR	QRB1A-A050B70A	65320076
28	ANTIJAMMING FILTER		65323170
29	IGNITION CABLE	TC	65320947
		TL	65320948
30	IGNITION ELECTRODES SET		65325004
31	COIL	EL011	65323809
32	CONNECTOR WITH RECTIFIER	EL011	65323571
33	RING		65321721
34	HEAD SUPPORT		65324574
35	SPRING HOLDER		65321720
36	FIRING HEAD	TC	65321722
		TL	65324575
37	PIPE	TC	65324267
		TL	65324576
38	HOLDER WAISTBAND		65324577
39	WAISTBAND		65324578
40	ROD NOZZLE HOLDER	TC	65324269
		TL	65324476
41	DISC SUPPORT		65320697
42	NOZZLE HOLDER		65320709
43	FRONT DISC		65320788
44	ROD FIRING HEAD	TC	65324579
		TL	65324580
45	BLAST TUBE	TC	65320458
46	BLAST TUBE END		65320462
47	AIR DAMPER MOTOR	STE15 Q3.51/6 10NM	65326211
48	SILENCER		65324071
49	OIL FILTER	70501/03	65324103
50	HOSES	25X1500	65323181
51	MANOMETER	CEWAL R1/4 D50-40BAR	65324105
52	NOZZLE		
53	GASKET		65321137
54	GASKET		65321138
55	GASKET		65321139
56	ADJUSTMENT OF OIL PRESSURE		65322351
57	CHECK VALVE	ART. FZVR10 3/8	65322205
58	OIL CAM GROUP		
59	MOTOR COUPLING		-
60	COUPLING		65325386
61	PUMP COUPLING		-
62	PUMP MOTOR	1,5KW230/400V	65325517
63	NOZZLE HOLDER SEAL		65325363
64	MODULATING CONTROL	SIEMENS RWF 50.21A9CB	65301220

TC = SHORT HEAD TL = LONG HEAD

Ecoflam Bruciatori S.p.A.
Via Roma, 64 - 31023 Resana (TV) - Italy
Tel. +39 0423 719500
Fax +39 0423 719580
http://www.ecoflam-burners.com
e-mail: export@ecoflam-burners.com
Società soggetta alla direzione e al coordinamento di Ariston Thermo S.p.A.
Via A. Merloni, 45 - 60044 Fabriano (AN) - CF 01026940427